GEARMORE INC.

VENTURI AIR SPRAYERS

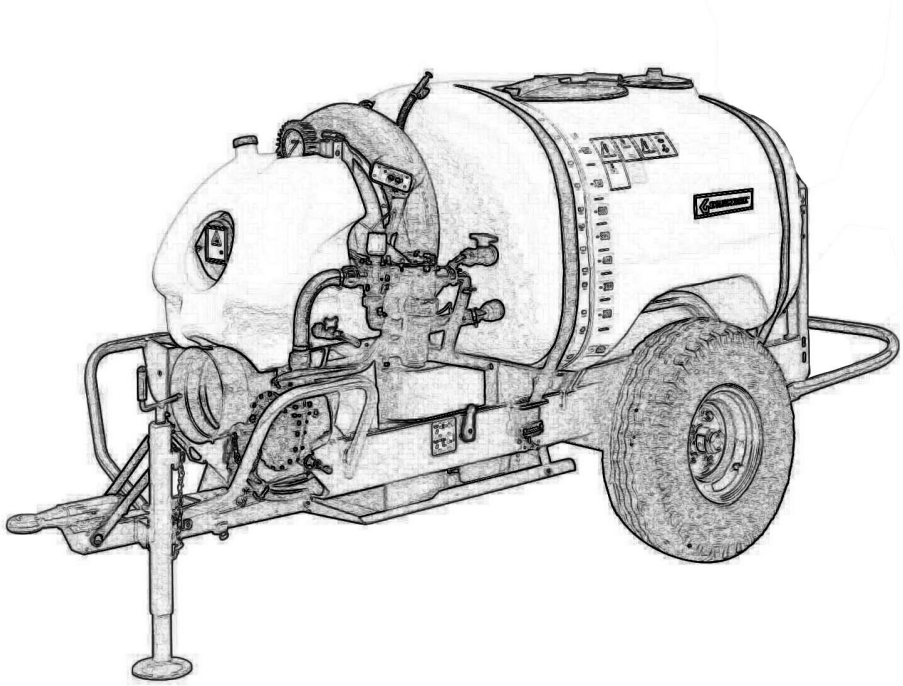

Parts Manual For
Models T50S1-800-G
200 Gallon Capacity

August 2017

Form: T50S1_800Book.indd

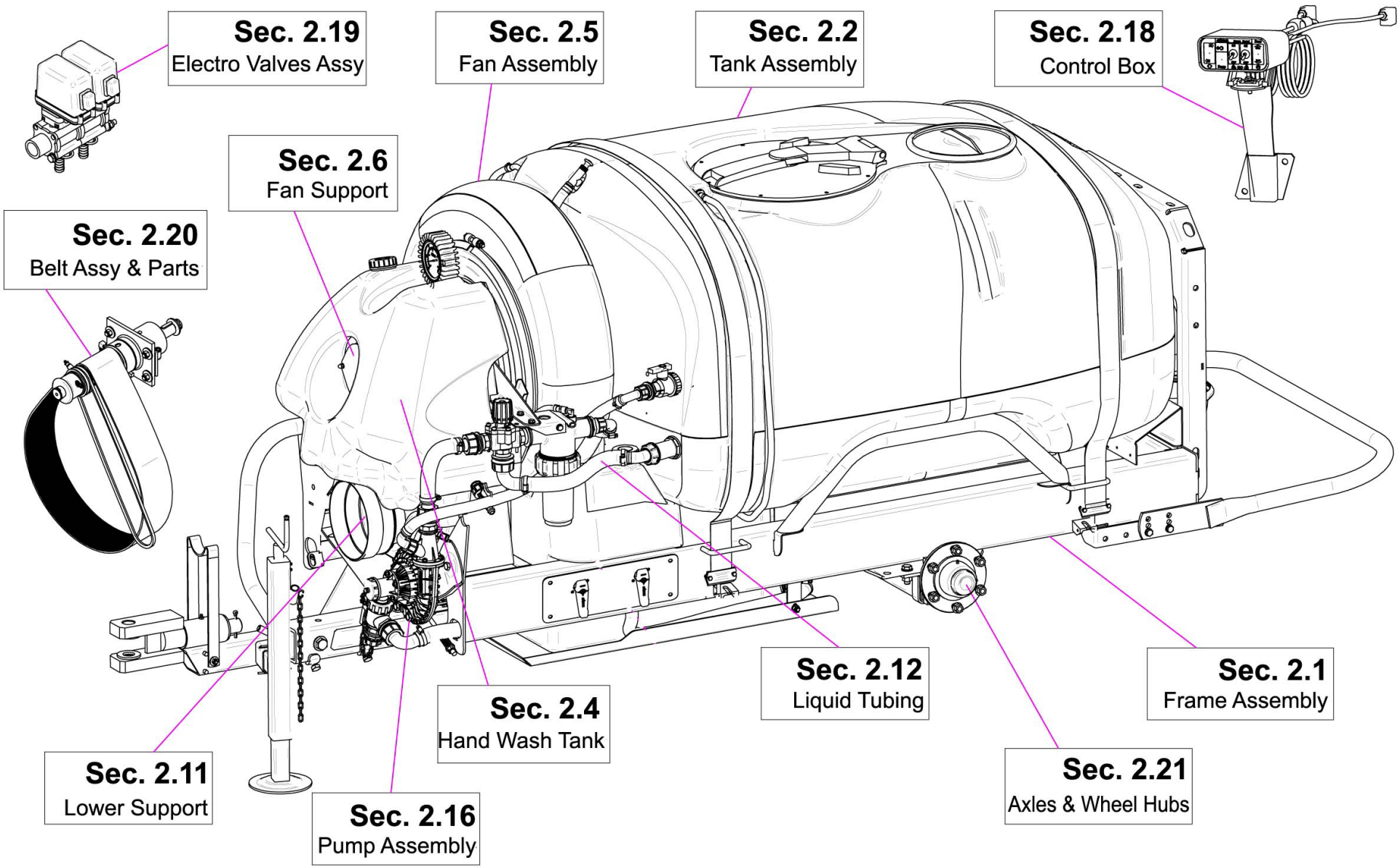
Sec. 2.19
Electro Valves Assy
Sec. 2.5
Fan Assembly
Sec. 2.2
Tank Assembly
Sec. 2.18
Control Box
Sec. 2.6
Fan Support
Sec. 2.20
Belt Assy & Parts
Sec. 2.12
Liquid Tubing
Sec. 2.1
Frame Assembly
Sec. 2.4
Hand Wash Tank
Sec. 2.11
Lower Support
Sec. 2.16
Pump Assembly
Sec. 2.21
Axles & Wheel Hubs

TABLE OF CONTENTS

SECTION	DESCRIPTION ..... PAGE	
1	**Introduction**	**1**
1.1	Purchaser's Responsibility	1
1.2	Serial Number Information	1
2	**Replacement Parts**	**2 - 39**
2.1	Frame Assembly	2-4
2.2	Tank Assembly	5-6
2.3	Tank Fittings & Cover	7-8
2.4	Hand Wash Tank	9
2.5	Fan Assembly	10
2.6	Fan Support	11
2.7	Fan Support Breakdown	12
2.8	Belt Tension Roller	13
2.9	Lubrication Tubing	14
2.10	Main Pulley & Overrunning Clutch	15
2.11	Fan Support Hub Assy	16
2.12	Liquid Flow Path Manual Controls	17-19
2.13	Pumps & Routing	20-21
2.14	Pressure Regulator & 3Way Valve	22
2.15	Suction Filter Assembly	23
2.16	Main Pump Breakdown	24-25
2.17	Agitation Pump Breakdown	26-27
2.18	Control Box 910208/T	28
2.19	Electro Valves	29-30
2.20	Pump & Fan Belts	31
2.21	Axle & Wheel Hubs	32
2.22	Driveshaft	33
3	**Limited Warranty**	**34**

1 INTRODUCTION

This manual contains parts diagrams and replacement parts lists. Do not modify the equipment in any way. Unauthorized modification may impair the function and/or safety and could affect the life of the equipment.

It is the responsibility of the owner to make sure the machine is maintained properly, and that all parts are in working order.

Where replacement parts are necessary for periodic maintenance and servicing, genuine factory replacement parts ***MUST*** be used to restore your equipment to original specifications. The manufacturer will not be responsible for injuries or damages caused by use of unapproved parts and/or accessories.

The manufacturer reserves the right to make improvements to the machinery and parts at any time and at their discretion.

OPERATOR ORIENTATION - The directions left, right, front and rear, are as seen from the driver's seat and facing in the direction of travel.

1.1 PURCHASER'S RESPONSIBILITY

It is the responsibility of the purchaser and/or operator to.....

- Inspect the equipment and replace or repair any parts that are damaged or worn which under continued operation would cause damage, wear to other parts, or cause a safety hazard.
- Return the equipment or parts to the authorized dealer, from where it was purchased, for service or replacement of defective parts that are covered by warranty. (The factory may inspect equipment or parts before warranty claims are honored.)
- Payment of all costs incurred by the dealer for traveling to or transporting the equipment for warranty inspection and or claims.

1.2 MODEL / SERIAL NUMBER

NAME: _____

PURCHASED FROM: _____

DATE OF PURCHASE: _____

MODEL NUMBER: _____

SERIAL NUMBER: _____

2 REPLACEMENT PARTS

2.1 FRAME ASSEMBLY

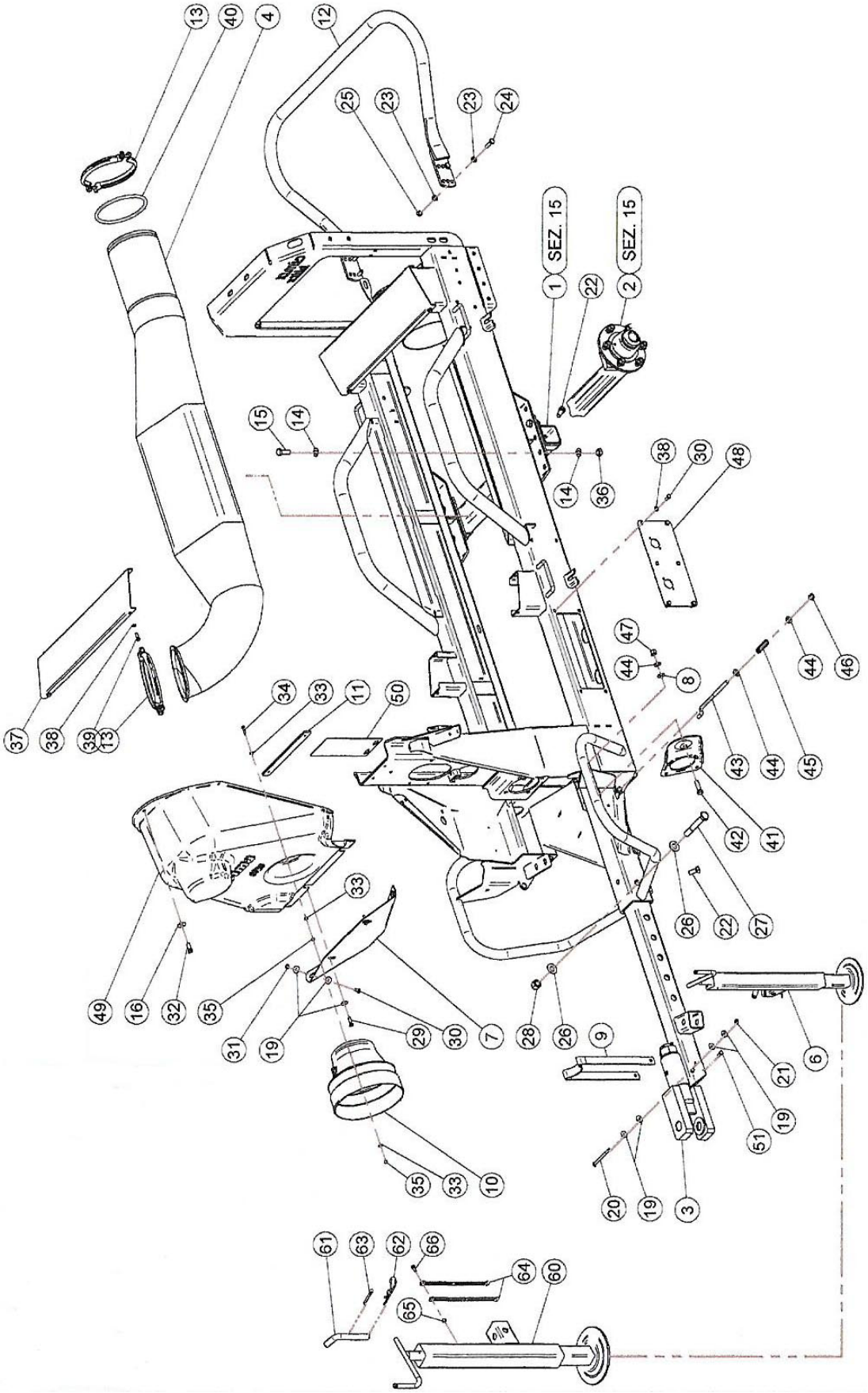

2.1 FRAME ASSEMBLY

REF.	QTY.	PART NO.	DESCRIPTION
1	1	X40.126.000	Axle
2	2	X40.020.150	Hub 6 Colonnette
3	1	X40.136.200	Draw-Bar "Tipo USA"
4	1	X40.141.100	Air Way Tunnel
6	1	X04.993.070C	Extractable Jack Stand
7	1	X20.531.000	Carter Fixing Plate
8	1	XMT.012.000	Washer D.12
9	1	X20.409.000	Shaft Support
10	1	X02.441.000	Shaft Cone D.240
11	1	X20.532.000	Front Housing Blocking Plate
12	1	X40.000.000	Bumper
13	2	X05.616.000	Pipe Clamp D.175
14	8	XRP.014.000	Washer D.14
15	4	XTE.014.040T	Screw TE M14 x 40
19	10	XRP.008.024	Washer D.8 x 24
20	1	XTE.008.100	Screw TE M8 x 100
21	1	XDA.008.0AG	Self Locking Nut M8
22	6	XTE.014.030T	Screw TE M14 x 30
23	8	XRP.010.000	Washer D.10
24	4	XTE.010.035T	Screw TE 10 x 35
25	4	XD0.10.5587G	Nut M20
26	2	XRP.018.000	Washer
27	1	XTE.018.120	Screw TE M18 x 120
28	1	XDA.018.0AG	Self Locking Nut M18
29	2	XTE.008.025T	Screw TE M8 x 25
30	10	XTE.008.020T	Screw TE 8 x 20
31	2	XD0.08.5588G	Nut M8
32	1	XTE.010.025T	Screw TE 10 x 25T
33	9	XRD.006.000	Tab Washer D.6
34	3	XTE.006.025T	Screw TE M6 x 25
35	6	XD0.06.5588G	Nut M6
36	4	XD0.014.5587G	Nut M14
37	2	X40.301.000	Plate Tank
38	12	XRP.008.000	Washer D.8
39	4	XTE.008.025T	Screw TE M8 x 25
40	1	X40.147.000	Gasket for Tunnel 45-50
41	1	X02.978.000SX	Bracket
42	1	XTE.012.040T	Bolt TE M12 x 40
43	1	X20.447.000	Belt Stretcher for Pump
44	3	XRP.012.000	Washer D.12
45	1	X02.964.000	CD 32 Pump Spring

2.1 FRAME ASSEMBLY

REF.	QTY.	PART NO.	DESCRIPTION
46	1	XDOT.12.5587	M12 Brass Nut
47	1	XDA.012.0AG	Nut M12
48	1	X40.378.000	Plate
49	1	X05.723.060	Front Housing for 1 Pump
50	1	X50.355.000	Product Note Support
51	2	XTE.008.016T	Screw TE M8 x 16
TONGUE JACK			
60	1	X04.993.070	Jack Stand Body
61	1	X20.505.000	Pin Jack Stand
62	1	X00.100.004	Split Pin D.4
63	1	XCP.006.040I	Pin D.6 Lg.40
64	2	X21.183.000	Cap Stop
65	1	XD0.06.5588G	Nut M6
66	1	XTE.006.016T	Screw TE M6 x 16

2.2 TANK ASSEMBLY LT 800

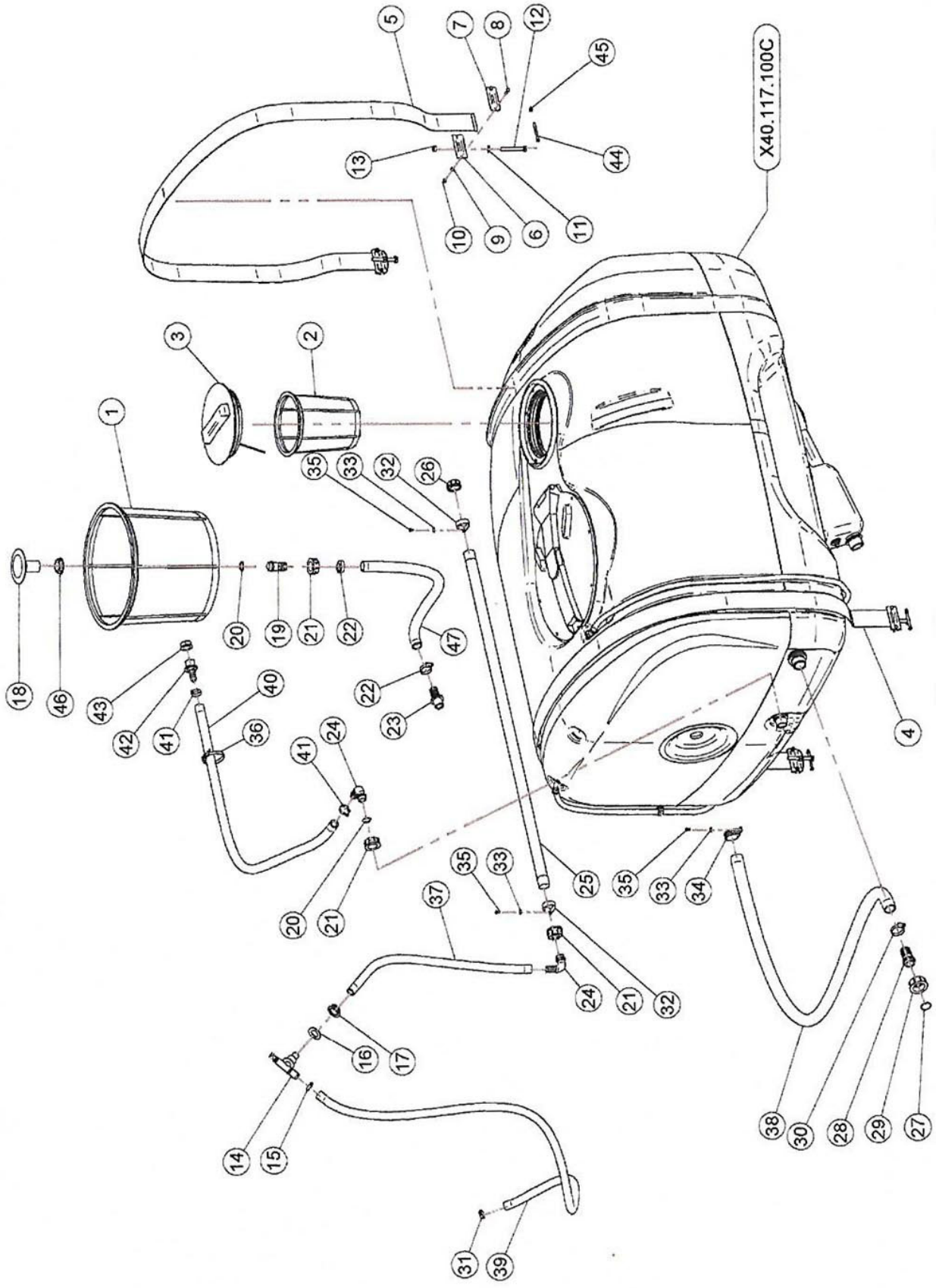

2.2 TANK ASSEMBLY LT 800

REF.	QTY.	PART NO.	DESCRIPTION
1	1	X02.404.100	Basket Filter 400 x 330
2	1	X02.298.000	Basket Filter D.204
3	1	X02.476.000	Threaded Lid D.255 with Rope
4	1	X02.481.280	Nylon Band 60 mm L=2800
5	1	X02.481.253	Nylon Band 60 mm L=2530
6	4	X20.512.000	Bracket
7	4	X20.513.000	Shaped Plate
8	8	XTE.006.020T	Screw TE M6 x 20
9	8	XRP.006.000	Washer D.6
10	8	XDA.006.0AG	Self Locking Nut M6
11	4	XRP.010.000	Washer D.10
12	4	XTE.010.080T	M10 x 80 Bolt
13	4	XDOT.10.5587	M10 Brass Nut
14	1	X02.135.000	Complete Piston Valve
15	1	XFC.023,5.025	Kobra Clamp 23.5-25
16	1	X02.032.000	Gasket D.26 x 40 SP. 2
17	1	X00.541.000	Nut 3/4"
18	1	X00.131.000	1" Vortex Damper Drive
19	1	X00.055.021	Straight Hose R.H. D.25
20	2	XOR.000.132	23.81 x 2.62 O-Ring Gasket
21	3	X00.055.24.2	1" Fly Nut
22	2	XF0.023.035I	Stainless Steel Clip
23	1	X20.793.000	Hosetail R.H. D.25 3/4" Gas M.
24	2	X00.055.038	Curved Union with R.H. D.19
25	1	X40.035.001	Perforated Hose 1" L=1200
26	1	XTF.001.000	Packing
27	1	XOR.003.112	O-Ring D.28.24 x 2.62
28	1	X00.058.028	Straight Hose R.H. D.30
29	1	X00.058.006	1" 1/4 Fly Nut
30	1	XF0.025.040I	Stainless Steel Clip
31	1	XFC.022,5.024	Kobra Clamp 22.5-24
32	2	XFN.035.000	Sticker
33	3	XRP.005.015I	Washer D.5 x 15
34	1	XFG.040.000	Sticker
35	3	XTE.005.010I	Screw TE M5 x 10
36	3	X02.355.000	Nylon Assembly Clamp
37	1	X02.212.080	Hose D.19 x 26 L=800
38	1	X02.238.120	Hose D.30 L=1200
39	1	X02.372.125	Hose D.19 L=1250
40	1	X02.212.130	Hose D.19 x 28 L=130
41	2	XFC.027,5.029	Kobra Clamp 27.08 - W8
42	1	X00.418.000	Straight Union R.H. 19 3/4 GAS
43	1	X02.182.100	Female 3/4" Cap
44	4	XTE.006.060I	Inox M6 x 60 TE Screw
45	4	XDC.06.5721I	Nut DIN 1587 6 x 1-6-10
46	1	X00.542.000	Nut 1"
47	1	X20.809.120	Hose D.25 L=1200

2.3 TANK FITTINGS & COVERS

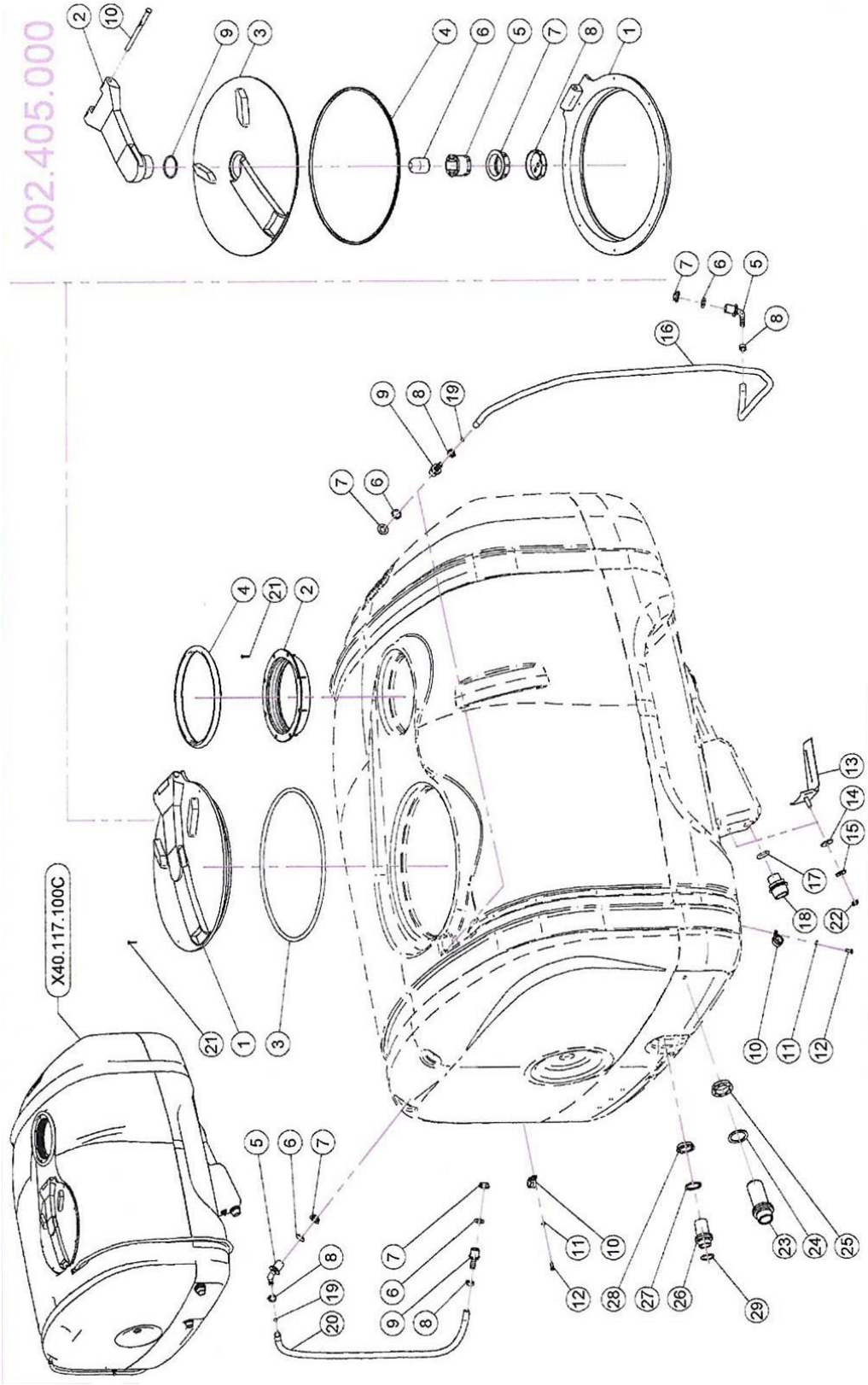

2.3 TANK FITTINGS & COVERS

REF.	QTY.	PART NO.	DESCRIPTION
1	1	X02.405.000	Hinged Tank Lid
2	1	X02.477.000	Threaded Ring D.255
3	1	X02.405.000.L	Gasket
4	1	X02.477.000.A	Threaded Ring Gasket D.255
5	2	X02.457.000	Hosetail D.13 90° M. 1/2"
6	4	XOR.004.081	20.22 x 3.53 O-Ring Gasket
7	4	X02.458.000	Lock Ring 1/2"
8	4	XFC.016,5.018	Kobra Clamp 16.5 - 18
9	2	X02.482.000	Hosetail Male Threaded 1/2"
10	2	XFG.018.000	Sticker
11	2	XRP.006.000	Washer D.6
12	2	XTE.006.016T	Screw TE M6 x 16
13	1	X20.498.002	Stainless Steel Anti-Vortex
14	1	X20.436.000	Special Garnishing for Antiwhirl
15	1	XRP.010.030	Washer D.10 x 30 mm
16	1	X02.378.160	Hose Vitreo D.12 x 16 L=1600
17	1	XOR.000.507	27 x 5 O-Ring Gasket
18	1	X00.045.012	1" 1/4 M - 1" M Reducer Nipple
19	2	X02.478.000	Red Floating Ball D.8.5
20	1	X02.378.085	Hose Vitreo D 12 x 16 L=850
21	16	XTAS.04,2.025I	Selfthreaded Screw 4.2 x 25
22	1	XDOT.10.5587	M10 Brass Nut
23	1	X00.345.000	Nipple 1" 1/4 + 1" 1/4 GAS
24	1	X02.033.000	Gasket
25	1	X00.543.000	Nut 1" 1/4 GAS
26	1	X00.055.134.L	Cutted Long Nipple 1"/1" GAS
27	1	X02.066.000	Gasket D.33 x 45
28	1	X00.542.000	Nut 1"
29	1	XOR.004.118	29.75 x 3.53 O-Ring Gasket

02.405.000 MAIN HITCH

1	1	X02.405.000.B	Base Ring
2	1	X02.405.001	Arm
3	1	X02.405.000.A	Gripping Plate
4	1	X02.405.002	Shaped Gasket
5	1	X20.787.000.G	Breather Valve
6	1	X20.787.000.F	Floating Ball
7	1	X20.787.000.H	Ring Nut
8	1	X20.787.000.I	Cap for Breather Valve
9	1	XOR.000.512	51 x 3.5 O-Ring Gasket
10	1	X20.787.000.D	Pin

2.4 HAND WASH TANK

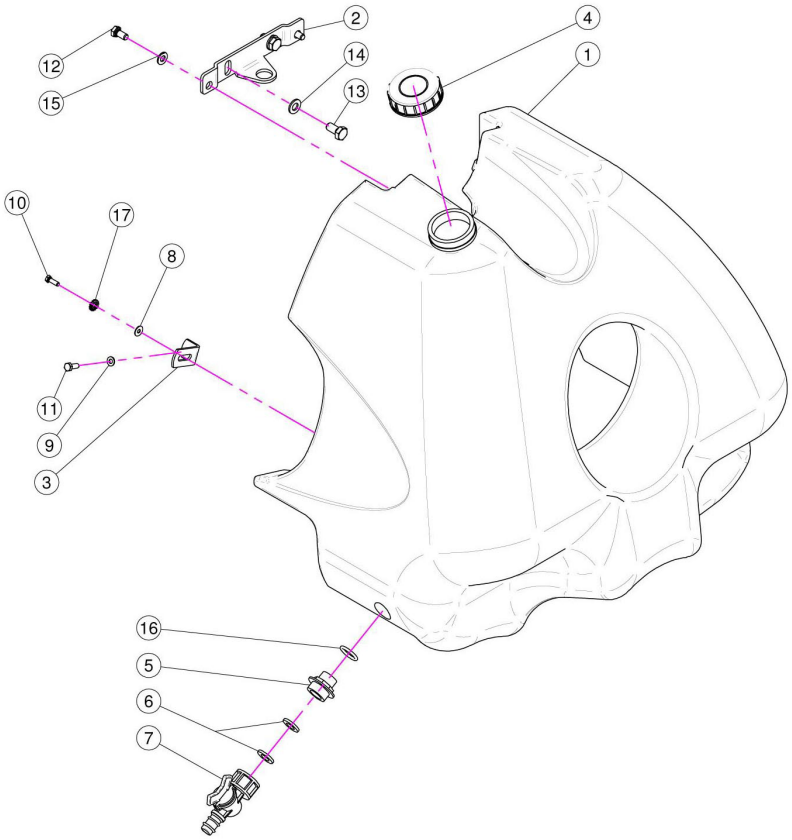

REF.	QTY.	PART NO.	DESCRIPTION
1	1	40.322.000	Hand Washing Tank
2	1	40.323.000	Fixing Bracket
3	2	40.324.100	Bracket
4	1	02.460.000	Female Threaded Tank Lid
5	1	00.055.044	Nipple 1/2" - 3/4" GAS
6	2	02.030.010	Gasket
7	1	02.497.000	3/4" Female Valve
8	2	RP.005.015I	Washer D.5 x 15
9	2	RP.006.000	Washer D.6
10	2	TE.005.016I	Screw TE M5 x 16
11	2	TE.006.016T	Screw TE M6 x 16
12	2	TE.008.016T	Screw TE M8 x 16
13	2	TE.010.020T	Screw TE M10 x 20
14	2	RP.010.000	Washer D.10
15	2	RP.008.000	Washer D.8
16	1	OR.004.081	20.22 x 3.53 O-Ring Gasket
17	2	RD.006.000	Tab Washer D.6

2.5 FAN ASSEMBLY

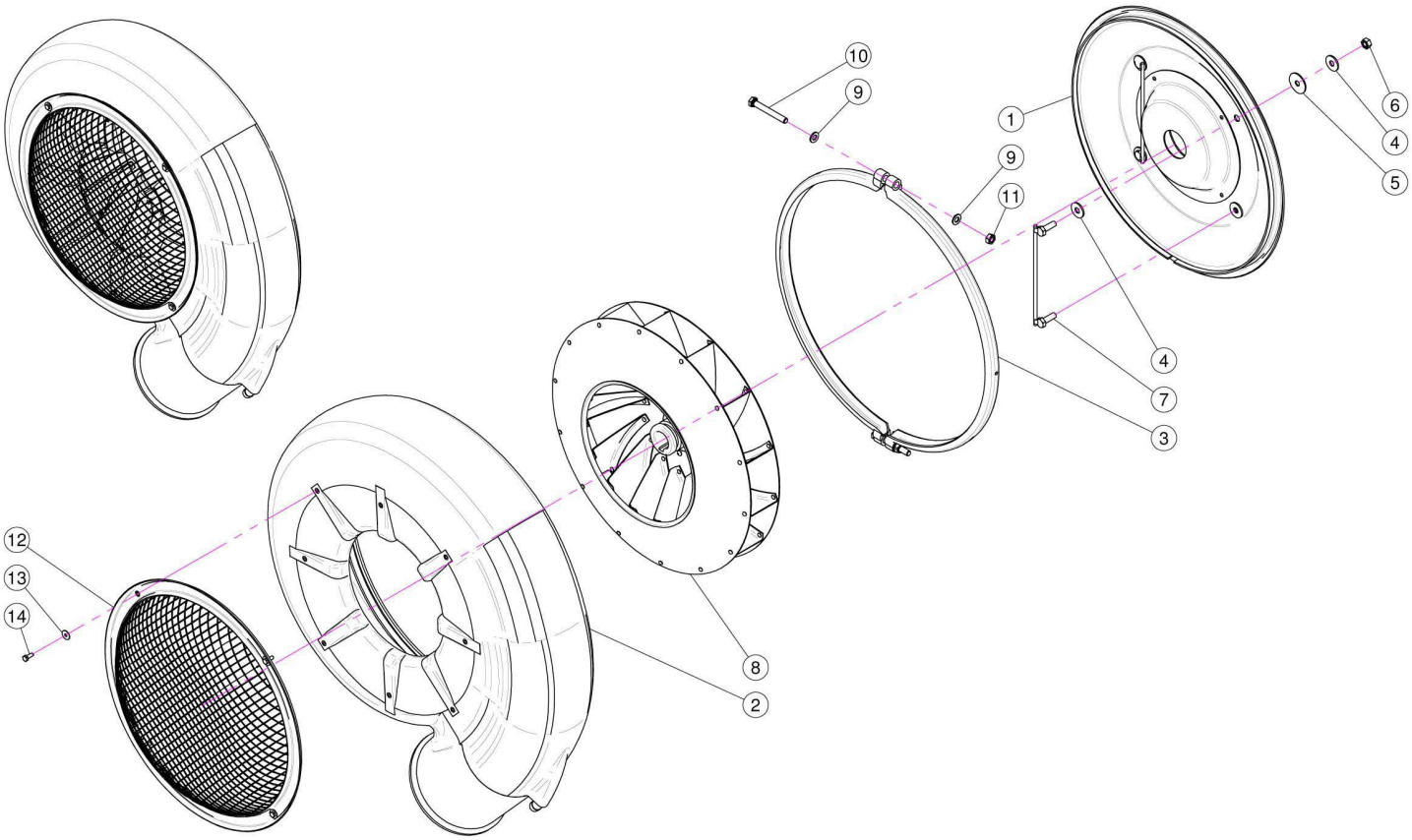

REF.	QTY.	PART NO.	DESCRIPTION
1	1	50.120.000	Fan 50 Cover
2	1	05.730.000	50 Fan Housing
3	1	05.731.000.Z	D.535 Clamp
4	8	RP.010.030	Washer D.10 x 30 mm
5	4	RP.010.040	Washer D.10 x 40
6	4	D0.10.5587G	Nut M10
7	2	20.088.000	Back Cover Bracket
8	1	05.732.000	Fan 50
9	4	RP.010.000	Washer D.10
10	2	TE.010.080T	Bolt M10 x 80
11	2	DOT.10.5587	M10 Brass Nut
12	1	05.654.200	Fan Net Protection
13	4	RP.006.018	Washer D.6 x 18
14	4	TE.006.016T	Screw TE M6 x 16

2.6 FAN SUPPORT

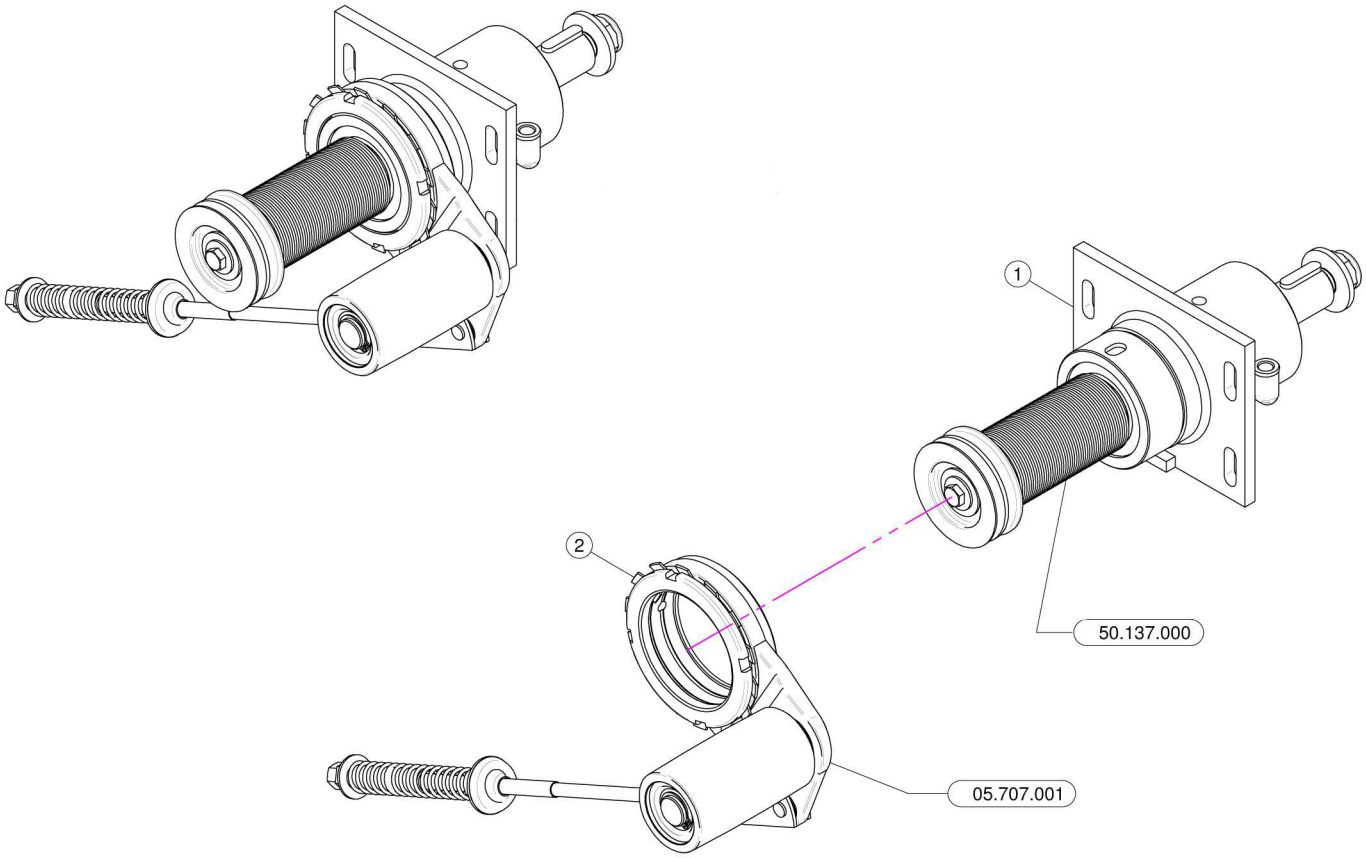

Super

REF.	QTY.	PART NO.	DESCRIPTION
1	1	50.137.000	Fan Support With Shaft
2	1	05.707.001	Automatic Belt Stretcher

2.7 FAN SUPPORT BREAKDOWN

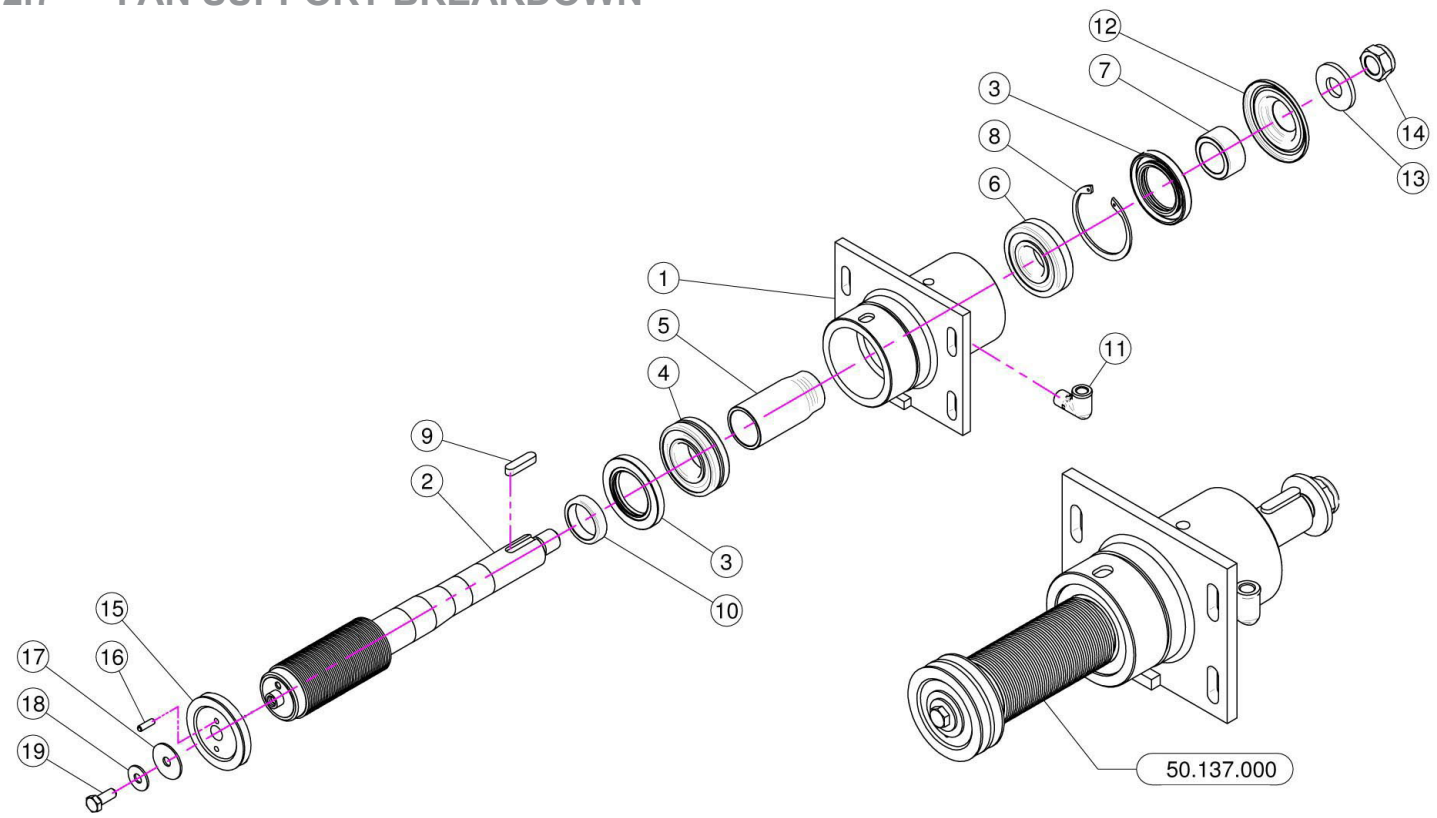

50.134.000

REF.	QTY.	PART NO.	DESCRIPTION
1	1	50.110.000	Nude Fan Support
2	1	50.119.060	Shaft With Pulley D.60
3	2	BASL.50.80.10	Viton Lip Seals - IEL (50-80-10)
4	1	K0.022.208	Roller Bearing 22208
5	1	50.112.000	Spacer
6	1	K0.021.307	Roller Bearing 21307
7	1	50.113.000	Spacer
8	1	I0.080.000	Internal D.80 Circlip
9	1	L.10.08.40	Feather Key 10 x 8 x 40
10	1	50.114.000	Spacer
11	1	20.789.000	Male/Female 90° Elbow
12	1	50.115.000	Dust Cover
13	1	20.820.000	Washer
14	1	DA.022.0BF	Self Locking Nut M22 x 1.5
15	1	05.816.000	Pulley For Pump D.88 1 x 3V
16	1	SE.006.020	Spring Pin D.6 x 20
17	1	RP.010.040	Washer D.10 x 40
18	1	RP.010.028	Washer D.10 x 28
19	1	TE.010.025FT	Bolt TE M10 x 25

2.8 BELT TENSION ROLLER

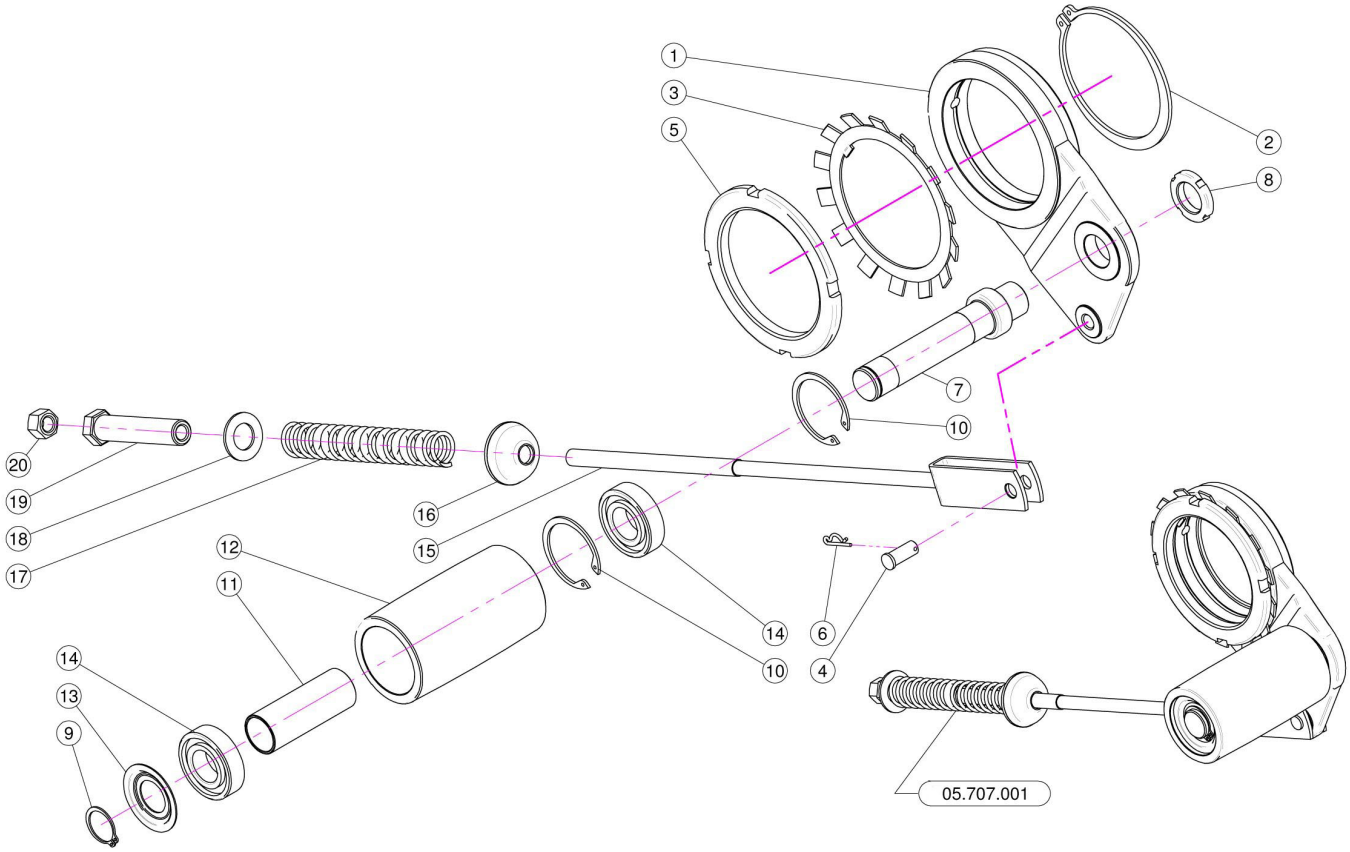

REF.	QTY.	PART NO.	DESCRIPTION
1	1	05.696.000	Idler Support
2	1	E0.100.000	External D.100 Circlip
3	1	MB.020.000	Tooth Lock Washer
4	1	04.593.000	Pin
5	1	05.704.000	Register Nut
6	1	00.100.002	Clip
7	1	05.697.000	Pivot
8	1	KM.005.000	Nut KM5
9	1	E0.025.000	External D.25 Circlip
10	2	I0.052.000	Internal D.52 Circlip
11	1	05.631.101	Spacer
12	1	05.630.000	Roller
13	1	04.585.000	Anti-Dust Cover
14	2	K6.205.2RS	Roller Bearing 6205-2RS
15	1	05.653.000	Belt Stretcher Fork
16	1	20.260.000	Special Washer D.12
17	1	04.093.000	Spring
18	1	RP.019.000	Washer D.19
19	1	04.583.000	Special Screw
20	1	D0.12.5587G	M12 Nut

2.9 LUBRICATION TUBING

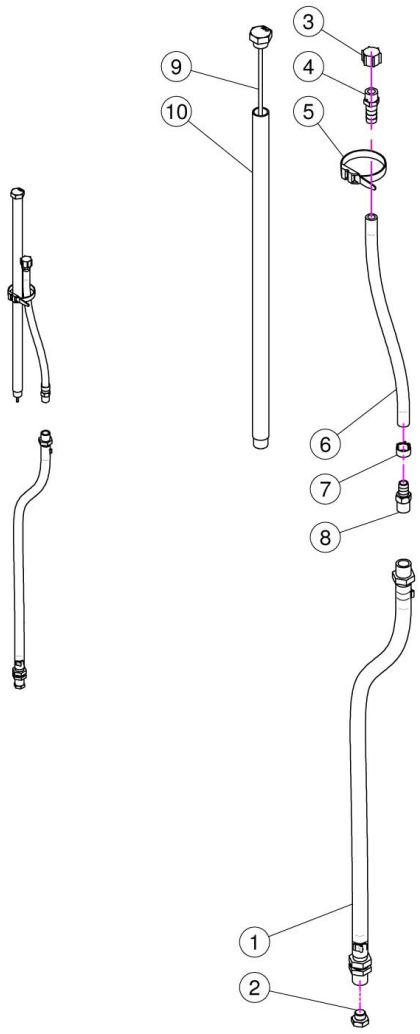

REF.	QTY.	PART NO.	DESCRIPTION
1	1	20.790.000	Drain Pipe 3/8"
2	1	40.266.000	Oil Exhaust Plug
3	1	02.013.000	Plug G1/4"
4	1	00.414.100	Straight Hose D.11 1/4" With Bleed
5	1	02.355.000	Nylon Assembly Clamp
6	1	02.217.000	Hose D.8 x 13 L=250 (Per Foot)
7	1	FC.014.5.016	Hose Clamp
8	1	20.792.000	Straight Hose D.11 G 1/4" For Breather
9	1	40.269.000	Filling Plug With Dipstick L=215
10	1	40.272.000	Filling Pipe L=201

2.10 MAIN PULLEY & OVERRUNNING CLUTCH

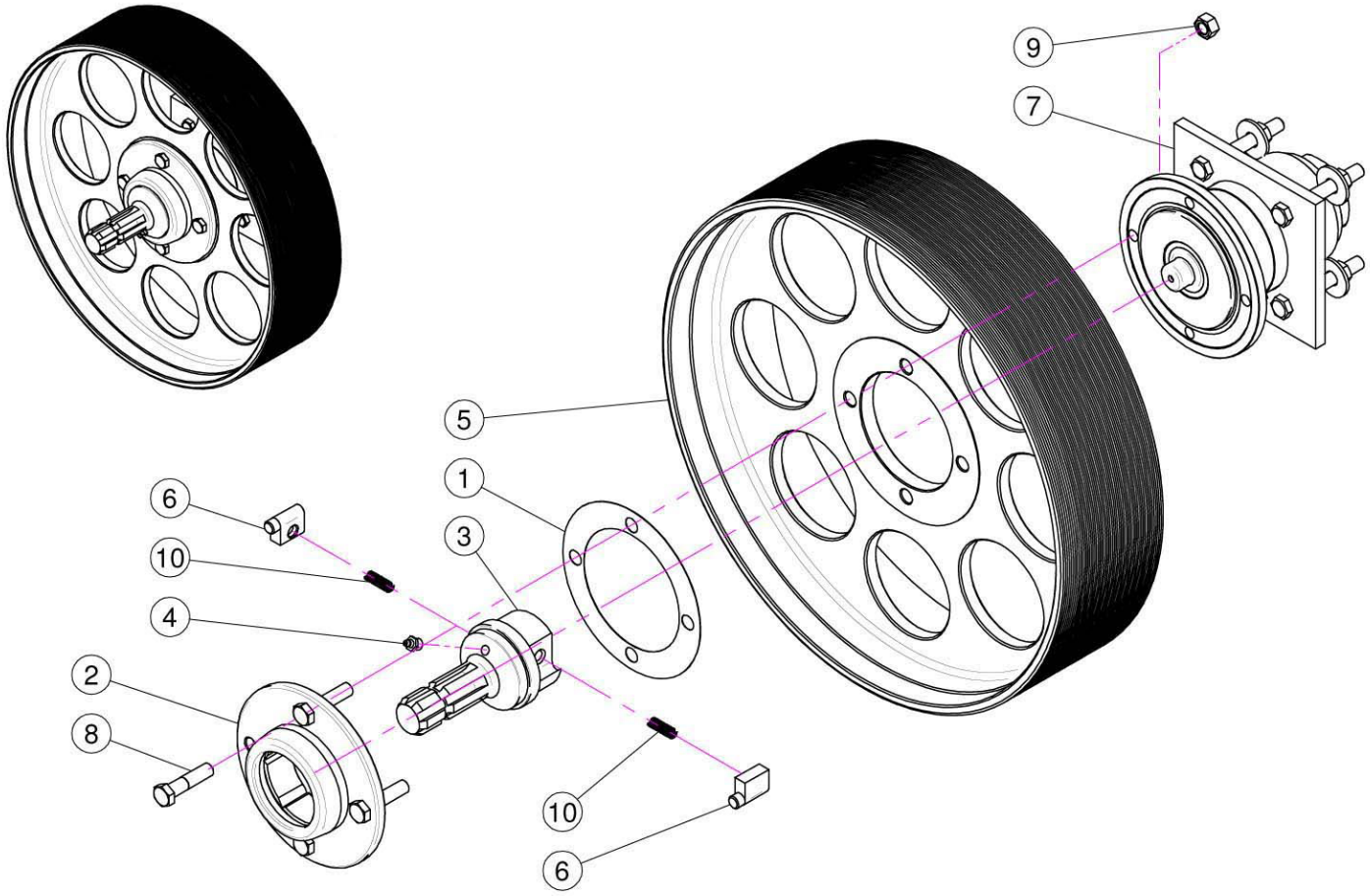

REF.	QTY.	PART NO.	DESCRIPTION
1	1	04.719.000	Gasket
2	1	04.066.000	Body
3	1	03.701.000	Rotor
4	1	ID.010.001	Grease Nipple
5	1	00.480.J50	Pulley Dia. 480 J 50
6	2	02.502.002	Pin
7	1	05.632.01C	Clutch
8	4	TE.012.050F	Bolt M12 x 50
9	4	D0.12.5587F	Nut M12 PG 5587F
10	2	02.502.001	Spring

2.11 FAN SUPPORT HUB ASSEMBLY

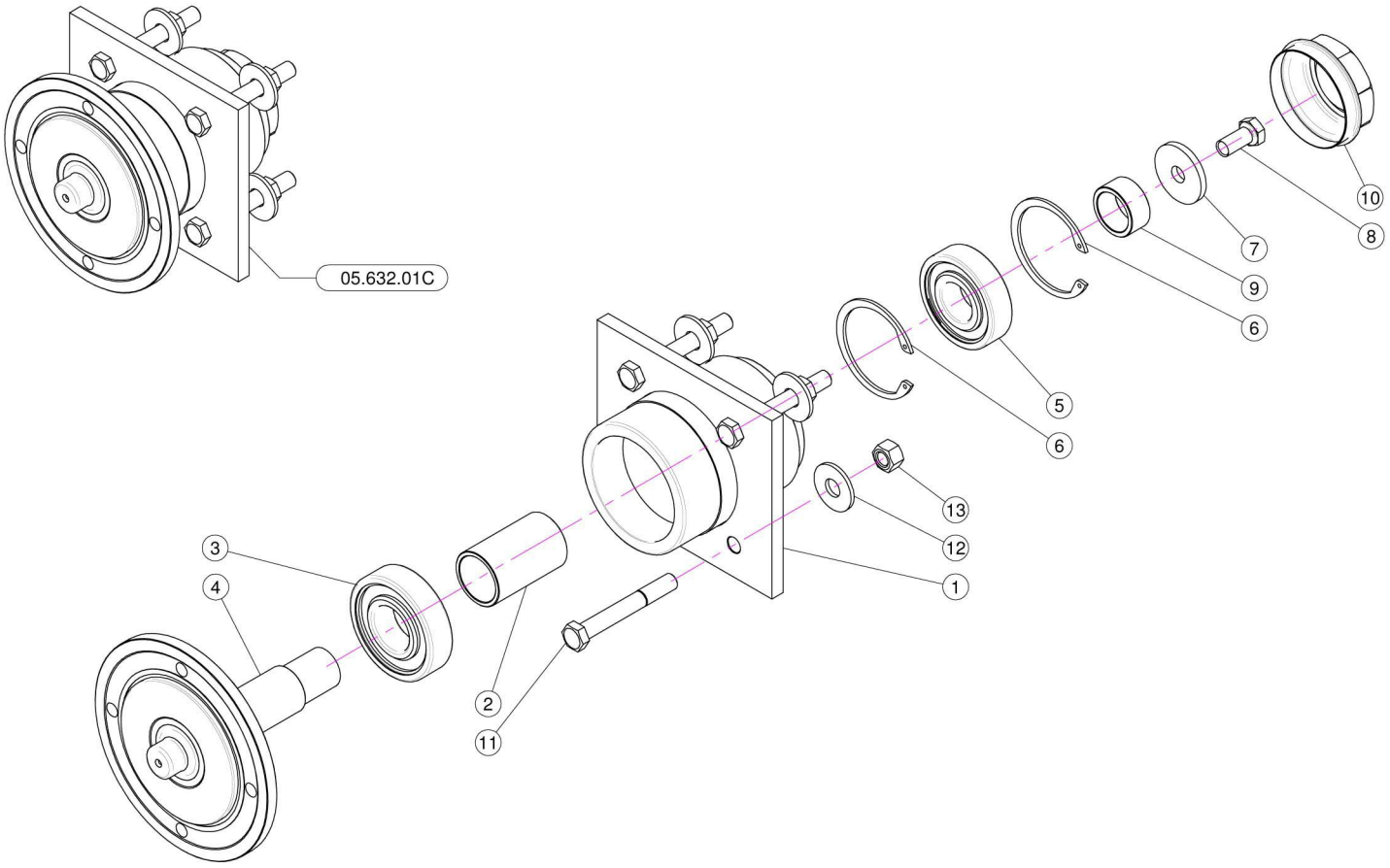

REF.	QTY.	PART NO.	DESCRIPTION
1	1	05.632.000	Lower Support
2	1	04.565.000	Lower Shaft Spacing Bar
3	1	K6.307.2RS	Bearing
4	1	04.589.000	Lower Shaft
5	1	K6.306.2RS	Bearing
6	2	I0.072.000	Spacing Bar
7	1	20.810.000	Special Washer For Lower Support
8	1	TE.012.025FT	Bolt TE M12 x 1.25
9	1	04.590.000	Spacer
10	1	04.555.001	Cover
11	4	TE.012.090	Screw TE M12 x 90
12	4	RP.012.036	Washer D12 x 36
13	4	D0.12.5587G	M12 Nut

2.12 LIQUID FLOW PATH

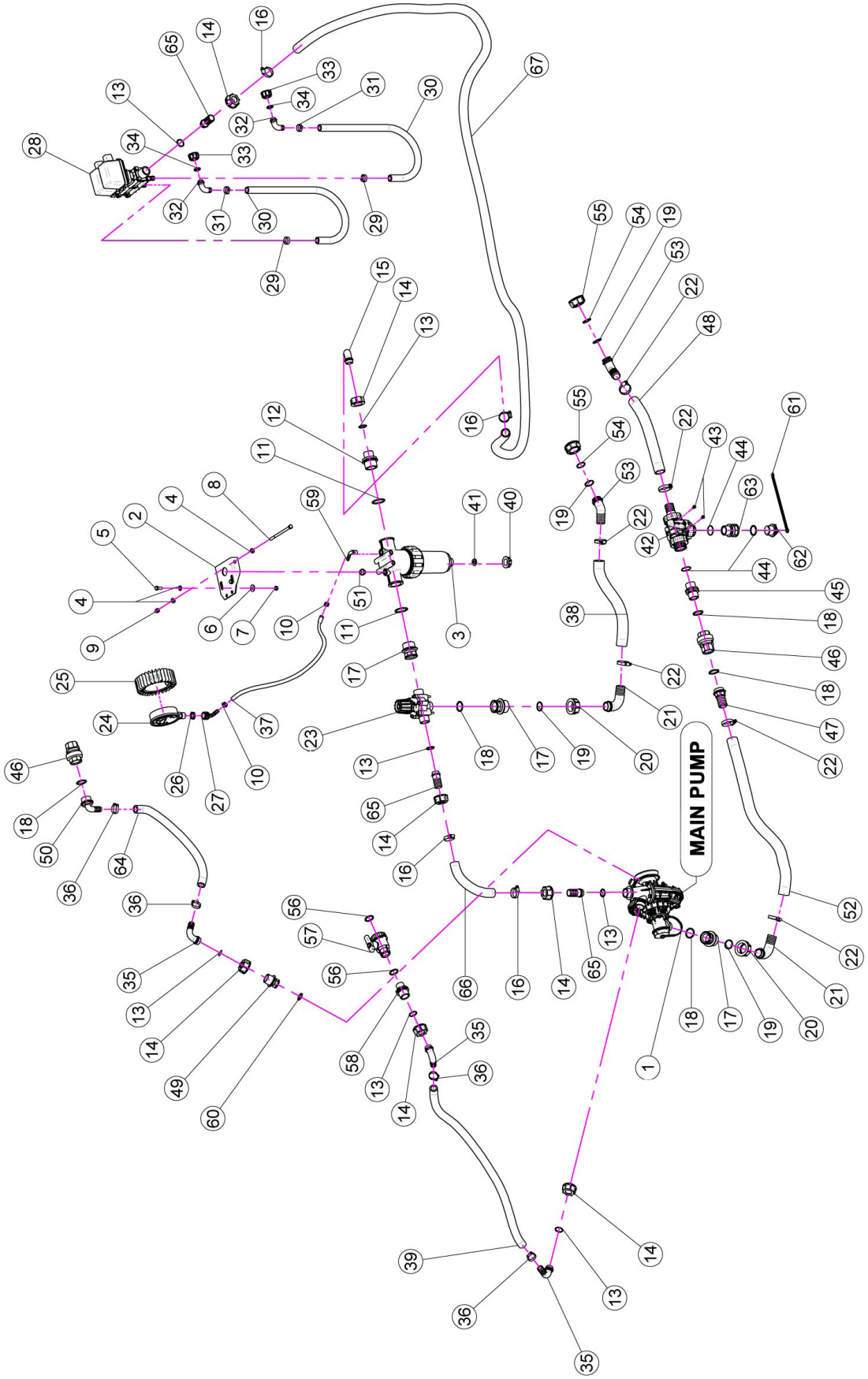

2.12 LIQUID FLOW PATH

REF.	QTY.	PART NO.	DESCRIPTION
1	1	02.157.071	Pump
2	1	20.519.100	Bracket
3	1	02.450.110	Line Filter 1" 1/4 Female
4	4	RP.008.000	Washer D.8
5	2	TE.008.025T	Screw TE M8 x 25
6	2	RP.008.024	Washer D.8 x 24
7	2	D0.08.5588G	M8 6S Big Lead Nut 5588
8	1	TE.008.130	Screw M8 x 130
9	1	DA.008.0AG	Self Locking Nut M8
10	2	FC.013.5.015	Hose Clamp
11	2	OR.000.144	O-Ring D.39.69 x 3.53
12	1	00.045.012	1" 1/4 M - 1" M Reducer Nipple
13	6	OR.000.132	23.81 x 2.62 O-Ring Gasket
14	6	00.055.24.2	1" Fly Nut
15	1	00.055.037	D.25 Hosetail
16	4	F0.023.035I	Stainless Steel Clip
17	3	02.374.000	M./F. 1" F/1" 1/4 M Reduction
18	4	OR.003.112	O-Ring D.28.24 x 2.62
19	2	00.058.006	1" 1/4 Fly Nut
20	6	F0.025.040I	Stainless Steel Clip
21	8	OR.004.118	29.75 x 3.53 O-Ring Gasket
22	2	00.058.004	D.30 Hosetail
23	1	02.447.000	3 Way Valve
24	1	02.445.000	Pressure Gauge Ø100 INOX 0-6 Bar
25	1	02.470.000	Pressure Gauge Guard
26	1	24.072.000	Brass Fly Nut 1/2"
27	1	21.012.000	D.12 Hosetail
28	1	02.390.08C	Electro Valves
29	2	00.055.021	Straight Hose R.H. D.25
30	2	FC.021.5.023	Hose Clamp 21.5 - 23
31	2	02.211.000	Hose D.16 L=1100 (Per Foot)
32	2	FC.023.5.025	Hose Clamp 23.5 - 25
33	2	00.055.046	Curved Union With R.H. D.17
34	2	00.055.045	3/4" Fly Nut
35	2	02.349.000	17 x 23 x 3 Flat Gasket
36	3	00.055.038	Curved Union With R.H. D.19
37	4	FC.027.5.029	Hose Clamp 27.08 - W8
38	1	21.058.300	Three Ways Valve
39	2	TA.006.012P	Screw M6 x 12
40	2	OR.002.125	31.47 x 1.78 O-Ring Gasket
41	1	00.055.034	Nipple 1" / 1" GAS
42	2	21.149.000	Valve 1" F.-F.

2.12 LIQUID FLOW PATH

REF.	QTY.	PART NO.	DESCRIPTION
43	1	00.422.100	Male Connector RH 30 1" GAS
44	1	21.186.000	Reducer Nipple 1" M - 1/2" F
45	1	TM.014.000	Male Plug 1/4"
46	2	02.339.000	45° Hosetail
47	2	OR.003.106	O-Ring D.26.65 x 2.62
48	2	00.493.000	1" 1/4 Fly Nut
49	2	OR.000.134	O-Ring D.25.8 x 3.53
50	1	02.395.000	Valve 3/4" GAS F.F. Ball
51	1	02.293.000	1" M - 3/4" M Reducer Nipple
52	1	21.084.000	Hosetail 90° WES 8/R1/4
53	1	20.770.000	Hose D.25 x 32 L=2870 (Per Foot)
54	1	02.217.000	Hose D.8 x 13 L=400 (Per Foot)
55	1	02.238.000	Hose D.30 x 41 L=550 (Per Foot)
56	1	02.212.000	Hose D.19 x 28 L=1000 (Per Foot)
57	1	02.182.000	Female 3/4" Cap
58	1	02.030.010	Gasket
59	1	02.238.000	Hose D.30 x 38 L=500 (Per Foot)
60	1	02.238.000	Hose D.30 x 38 L=1200 (Per Foot)
61	1	21.193.000	Hosetail 90° 1" R.H.
62	1	02.212.000	Hose D.19 L=1000 (Per Foot)
63	1	OR.004.081	20.22 x 3.53 O-Ring Gasket
64	1	02.384.000	1" M - 1" F Reducer Nipple
65	2	21.183.000	Cap Stop
66	2	21.182.000	Packing 1" M
67	1	02.274.000	Female Tesse 1"
68	1	02.403.000	Straight Hose R.H. D.25 - 1"
69	1	OR.000.507	27 x 5 O-Ring Gasket
70	1	20.809.000	Hose D.25 x 32 L=260 (Per Foot)

2.13 PUMPS & ROUTING

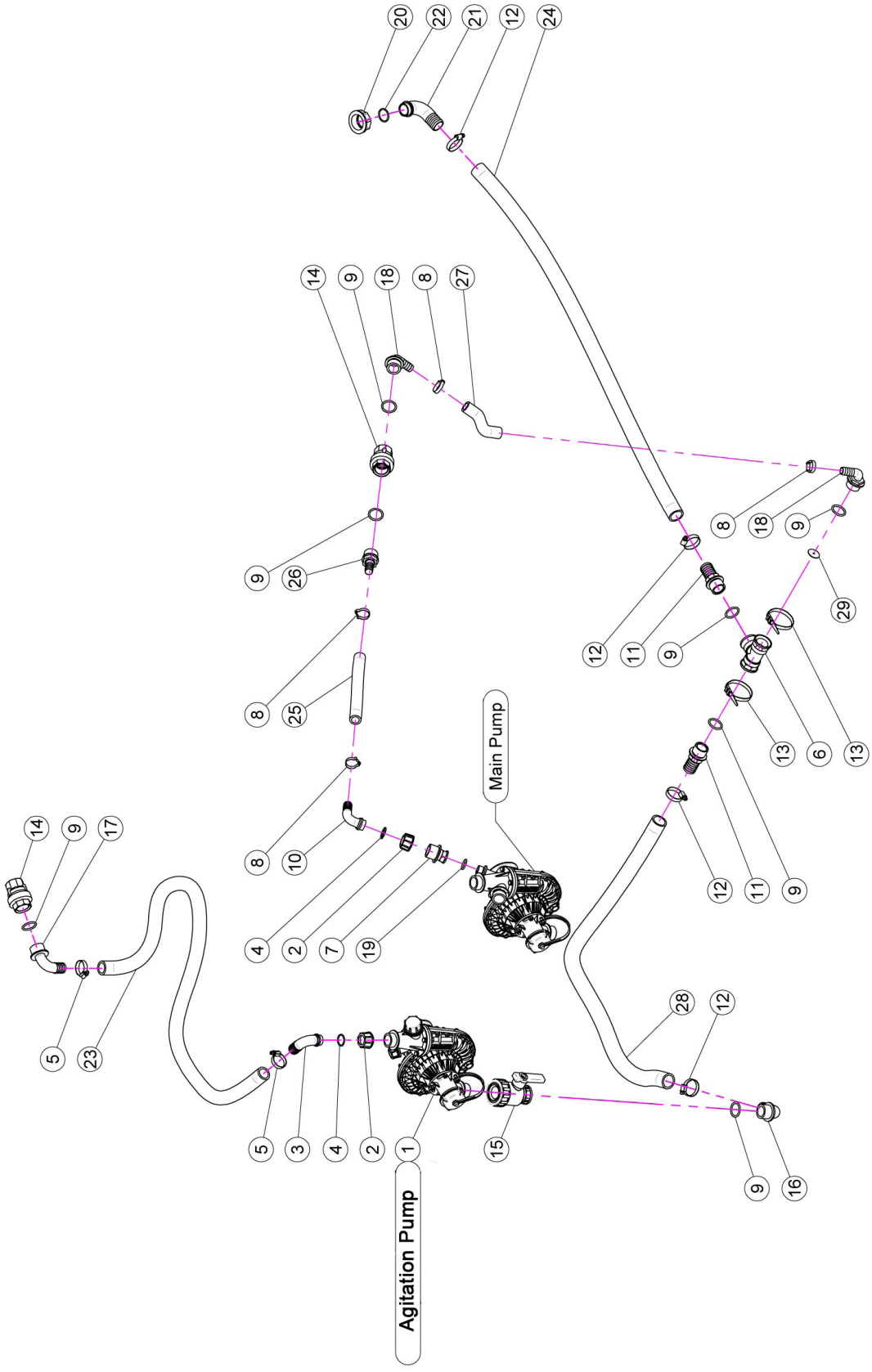

2.13 PUMPS & ROUTING

REF.	QTY.	PART NO.	DESCRIPTION
1	1	02.157.062	Pump
2	2	00.055.24.2	1" Fly Nut
3	1	00.055.037	D.25 Hosetail
4	2	OR.000.132	23.81 x 2.62 O-Ring Gasket
5	2	F0.023.035I	Stainless Steel Clip
6	1	02.274.000	Female Tessse 1"
7	1	21.186.000	Reducer Nipple 1" M - 1/2" F
8	4	FC.026.5.028	Hose Clamp 26.5 - 28
9	7	OR.004.118	29.75 x 3.53 O-Ring Gasket
10	1	00.055.038	Curved Union With R.H. D.19
11	2	00.422.000	Male Connector RH 30 1" GAS
12	4	F0.025.040I	Stainless Steel Clip
13	2	02.355.000	Nylon Assembly Clamp
14	2	21.149.000	Valve 1" F.-F.
15	1	04.109.000	Two Ways Valve
16	1	00.465.000	Hosetail D.30 1" GAS
17	1	24.068.000	D.25 Hosetail
18	2	21.193.000	Hosetail 90° 1" R.H.
19	1	OR.004.081	20.22 x 3.53 O-Ring Gasket
20	1	00.493.000	1" 1/4 Fly Nut
21	1	00.058.004	D.30 Hosetail
22	1	OR.003.112	O-Ring D.28.24 x 2.62
23	1	20.809.000	Hose D.25 L=1400 (Per Foot)
24	1	20.852.000	Hose D.30 L=2000 (Per Foot)
25	1	02.212.000	Hose D.19 L=170 (Per Foot)
26	1	02.402.100	Straight Hose R.H. D.19 - 1"
27	1	02.212.000	Hose D..19 L=170 (Per Foot)
28	1	20.852.000	Hose D.30 L=1200 (Per Foot)
29	1	40.386.000	Washer w/Hole D.4 x Tee-Piece Union 2° Pump

2.14 PRESSURE REGULATOR & 3 WAY VALVE

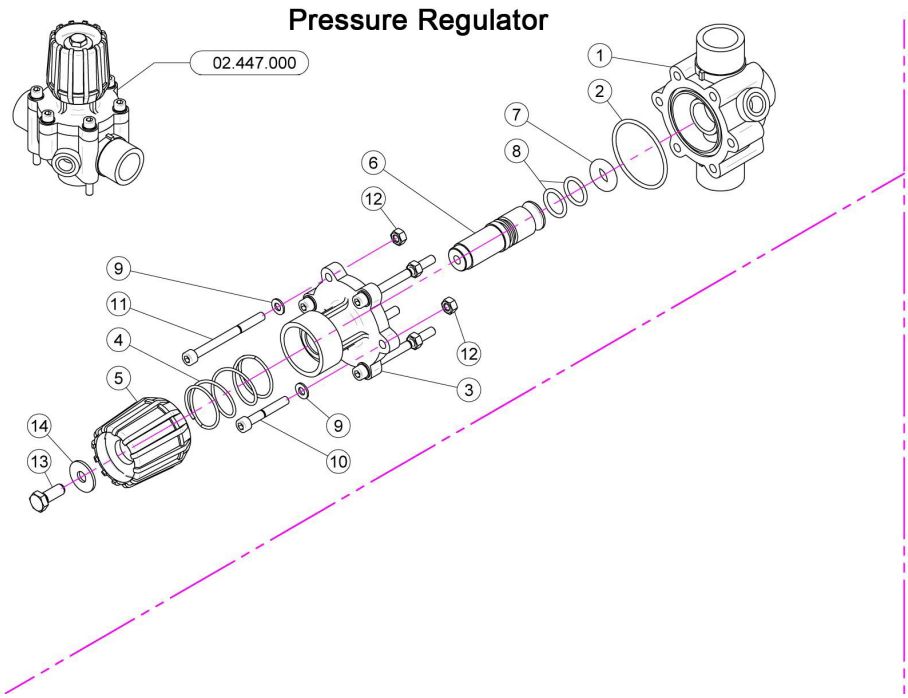

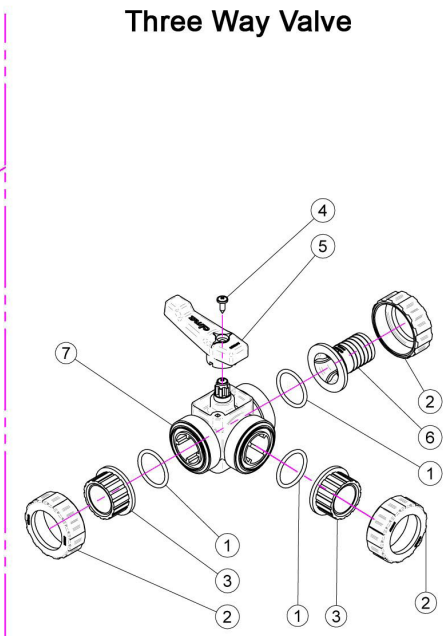

PRESSURE REGULATOR

REF.	QTY.	PART NO.	DESCRIPTION
1	1	02.447.001	Body For Regulator Valve
2	1	OR.003.193	O-Ring Gasket 48.89 x 2.62
3	1	02.447.009	Upper Flange
4	1	02.447.011	Spring
5	1	02.447.010	Regulation Valve Knob
6	1	02.447.014	Valve Pin
7	1	02.447.005	Special O-Ring For Gate 2447
8	2	OR.003.068	O-Ring Gasket 17.12 x 2.62
9	6	RP.006.000	Washer D.6
10	2	TCE.006.040	Bolt TCE M6 x 40
11	4	TCE.006.070	Bolt TCE M6 x 70
12	6	D0.06.5588G	Nut M6
13	1	TE.008.025I	INOX 8 x 25 Screw
14	1	RP.008.024I	INOX Washer D.8 x 24

3-WAY VALVE

1	3	OR.004.137	O-Ring D.34.52 x 3.53
2	3	21.058.007	Valve Union Nut
3	2	21.058.006	Valve End Connector
4	1	TA.05.5.016	Self Threaded Screw M5.5 x 16
5	1	21.058.003	Valve Handle
6	1	21.058.009	Rubber Holder D.30
7	1	21.058.110	Body of Three Way Valve

2.15 SUCTION FILTER ASSEMBLY

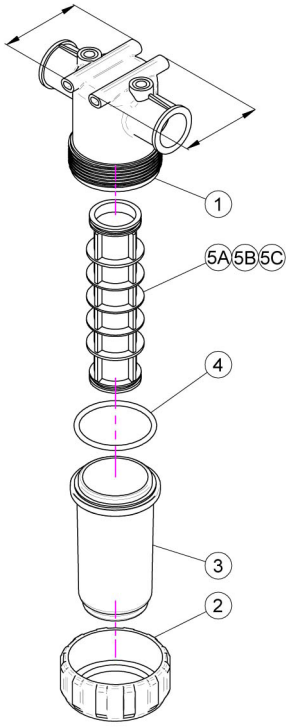

02.450.010

REF.	QTY.	PART NO.	DESCRIPTION
1	1	02.450.001	Line Filter Body
2	1	02.450.003	Ring Nut Filter In Line
3	1	02.450.011	Lid Filter With Unloading
4	1	OR.000.178	O-Ring D.74.63 x 5.33
5A	1	02.450.004C	Cartridge w/ O-Ring 50 Mesh (Blue)
5B	1	02.450.204C	Cartridge w/ O-Ring 80 Mesh (Grey)
5C	1	02.450.104C	Cartridge w/ O-Ring 32 Mesh (White)

2.16 MAIN PUMP BREAKDOWN

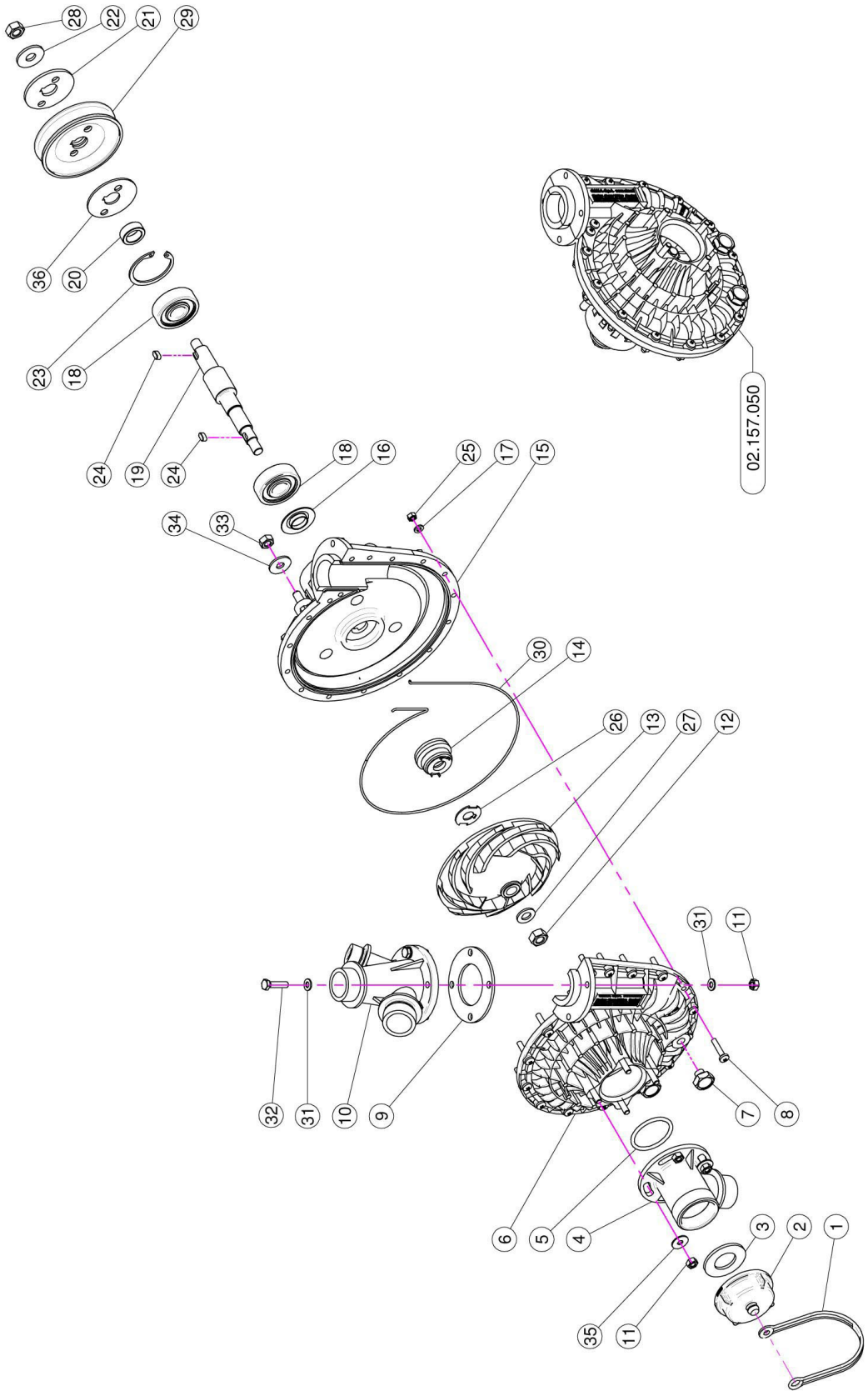

2.16 MAIN PUMP BREAKDOWN

REF.	QTY.	PART NO.	DESCRIPTION
1	1	21.183.000	Cap Stop
2	1	02.120.000	Rapid Thread Cap
3	1	02.130.000	24 x 46 x 3 Rubber Gasket
4	1	02.116.000	Suction Fitting
5	1	OR.000.144	O-Ring D.39.69 x 3.53
6	1	02.152.010	Housing
7	2	TM.010.015	M10 x 1.5 Cap
8	17	TC.05.25.85	Cross Slotted Screw M5 x 25
9	1	02.179.000	Rubber Gasket
10	1	02.113.000	Delivery Fitting
11	8	DOT.06.5587	M6 Brass Nut 5587
12	1	DOT.10.5587	M10 Brass Nut
13	1	02.153.000	CD32 Pump Impeller
14	1	00.085.024CS	Mechanical Seal
15	1	02.151.010	Pump Casing
16	1	20.406.000	Special Cover For Pump
17	17	RP.005.000	Washer D.5
18	2	K6.303.2RS	Roller Bearing
19	1	02.155.010	CD32 Pump Shaft
20	1	02.722.000	Bush
21	1	02.723.001	Special Washer 3 mm
22	1	RP.010.030	Washer D.10 x 30 mm
23	1	I0.047.000	Internal D.47 Circlip
24	2	L.05.05.10	5 x 5 x 10 Tang
25	17	DOT.05.5587	M5 Brass Nut (5587)
26	1	02.114.000	INOX Special Washer
27	1	RP.010.00I	Washer D.10 INOX
28	1	D0.10.5588G	M10 6S Big Lead Nut 5588
29	1	02.723.002	Pulley For Pump D.88 x 1 3 V
30	1	OR.C02.070	OR Cord D.2 L=700
31	8	RP.006.000	Washer D.6
32	4	TE.006.025T	Screw TE M6 x 25
33	3	D0.08.5588G	M8 6S Big Lead Nut 5588
34	3	RP.008.024	Washer D.8 x 24
35	3	RP.006.018	Washer D.6 x 18
36	1	02.723.005	Special Washer 2 mm

2.17 AGITATION PUMP BREAKDOWN

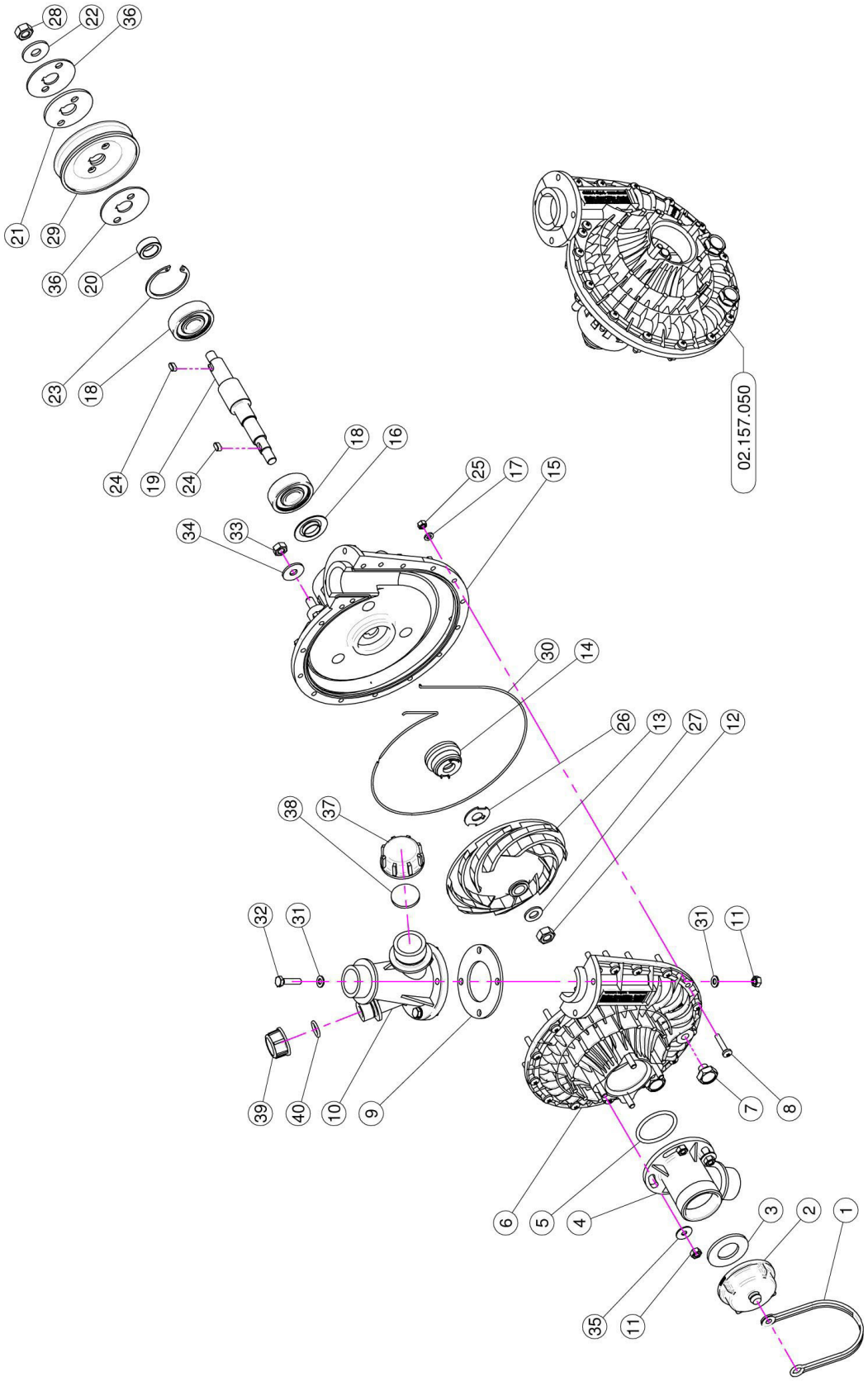

2.17 AGITATION PUMP BREAKDOWN

REF.	QTY.	PART NO.	DESCRIPTION
1	1	21.183.000	Cap Stop
2	1	02.120.000	Rapid Thread Cap
3	1	02.130.000	24 x 46 x 3 Rubber Gasket
4	1	02.116.000	Suction Fitting
5	1	OR.000.144	O-Ring D.39.69 x 3.53
6	1	02.152.010	Housing
7	2	TM.010.015	M10 x 1.5 Cap
8	17	TC.05.25.85	Cross Slotted Screw M5 x 25
9	1	02.179.000	Rubber Gasket
10	1	02.113.000	Delivery Fitting
11	8	DOT.06.5587	M6 Brass Nut 5587
12	1	DOT.10.5587	M10 Brass Nut
13	1	02.153.000	CD32 Pump Impeller
14	1	00.085.024CS	Mechanical Seal
15	1	02.151.010	Pump Casing
16	1	20.406.000	Special Cover For Pump
17	17	RP.005.000	Washer D.5
18	2	K6.303.2RS	Roller Bearing
19	1	02.155.010	CD32 Pump Shaft
20	1	02.722.000	Bush
21	1	02.723.001	Special Washer 3 mm
22	1	RP.010.030	Washer D.10 x 30 mm
23	1	I0.047.000	Internal D.47 Circlip
24	2	L.05.05.10	5 x 5 x 10 Tang
25	17	DOT.05.5587	M5 Brass Nut (5587)
26	1	02.114.000	INOX Special Washer
27	1	RP.010.00I	Washer D.10 INOX
28	1	D0.10.5588G	M10 6S Big Lead Nut 5588
29	1	02.723.000	Pulley For Pump D.82.5 x 1 3 V
30	1	OR.C02.070	OR Cord D.2 L=700
31	8	RP.006.000	Washer D.6
32	4	TE.006.025T	Screw TE M6 x 25
33	3	D0.08.5588G	M8 6S Big Lead Nut 5588
34	3	RP.008.024	Washer D.8 x 24
35	3	RP.006.018	Washer D.6 x 18
36	2	02.723.005	Special Washer 2 mm
37	1	TF.001.000	Packing
38	1	24.100.000	Gasket D.30 x 3
39	1	TF.012.000	Blank Cap 1/2"
40	1	OR.000.117	13.1 x 18.34 x 2.62 O-Ring Gasket

2.18 CONTROL BOX 910208/T-ACC

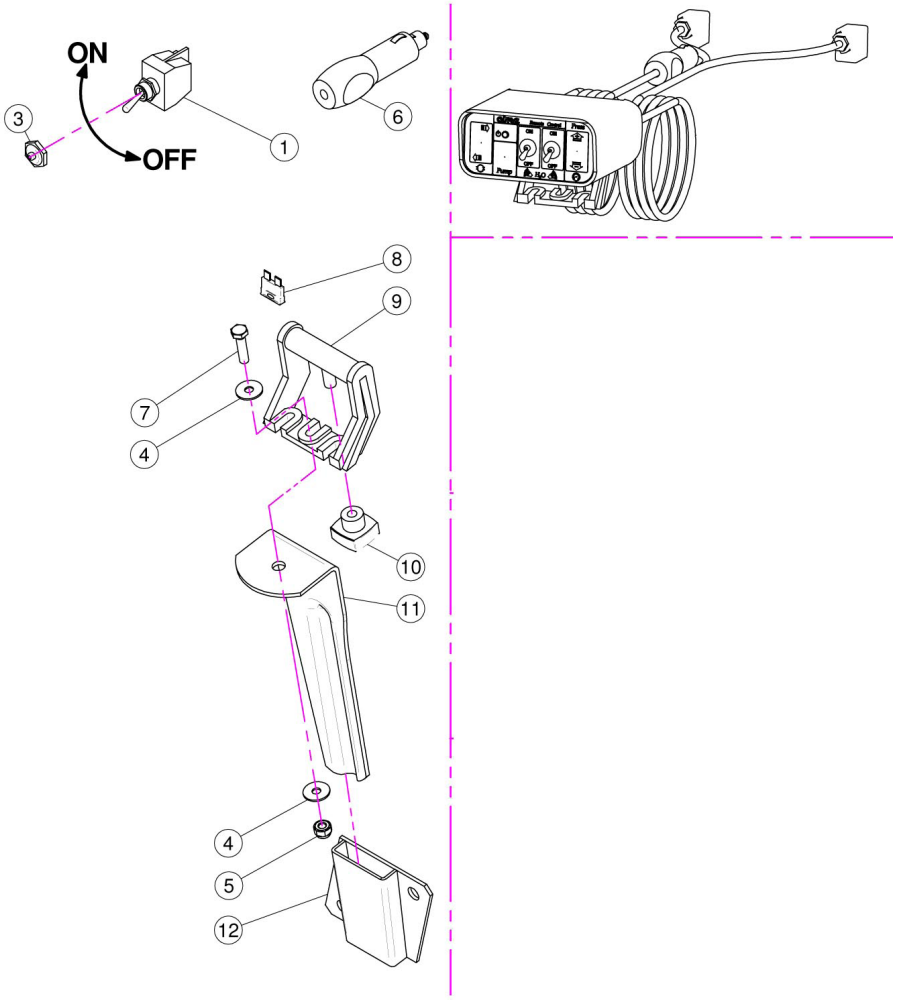

REF.	QTY.	PART NO.	DESCRIPTION
1	2	21.030.005	Switch 2V 2P On-Off 10A
3	2	21.030.007	Switch Cap D.12
4	2	RP.006.018	Washer D.6 x 18
5	1	DA.006.0AG	Self Locking Nut - High M6
6	1	21.030.008	12V Power Jack
7	1	TE.006.025T	Screw TE M6 x 25
8	1	21.030.004	10 Ah Fuse
9	1	21.030.002	Moving Fixing Bracket
10	1	21.030.003	Fixing Knob
11	1	20.111.000	Bracket
12	1	20.107.000	Female Bayonet Support

2.19 ELECTRO VALVES

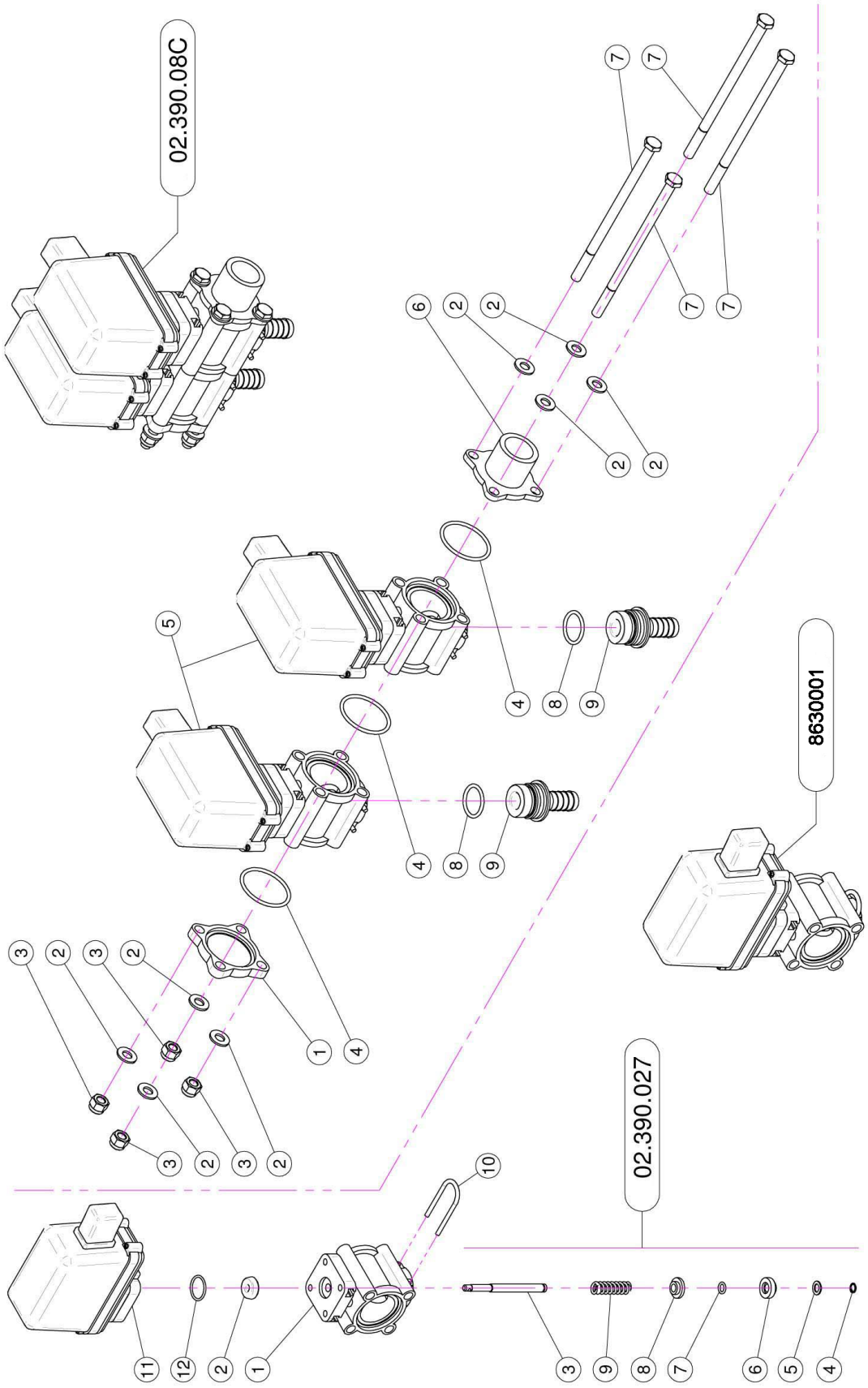

2.19 ELECTRO VALVES

02.390.029

REF.	QTY.	PART NO.	DESCRIPTION
1	1	02.390.007	Valve Body
2	1	02.390.008	Gasket
3	1	02.390.020	Pin
4	1	02.390.013	Stop Ring
5	1	02.390.014	Washer 7.2 x 12 INOX
6	1	02.390.015	Lower Valve
7	1	02.390.016	O-Ring
8	1	02.390.009	Superior Valves
9	1	02.390.011	Spring
10	1	21.130.005	Fork
11	1	02.390.028	Solenoid Valve
12	1	OR.002.075	D.18.77 x 1.78 O-Ring

02.390.08C

1	1	02.390.017	Valve Flange
2	8	RP.008.000	Washer D.8
3	4	DA.008.0AG	Self Locking Nut M8
4	3	OR.003.156	O-Ring Gasket 39.34 x 2.62
5	2	02.390.029	Solenoid Valve
6	1	02.390.018	Connector
7	4	TE.008.150	Screw TE M8 x 150
8	2	OR.000.130	22.22 x 2.62 O-Ring Gasket
9	2	02.406.000	Hosetail D.16

2.20 PUMP & FAN BELTS

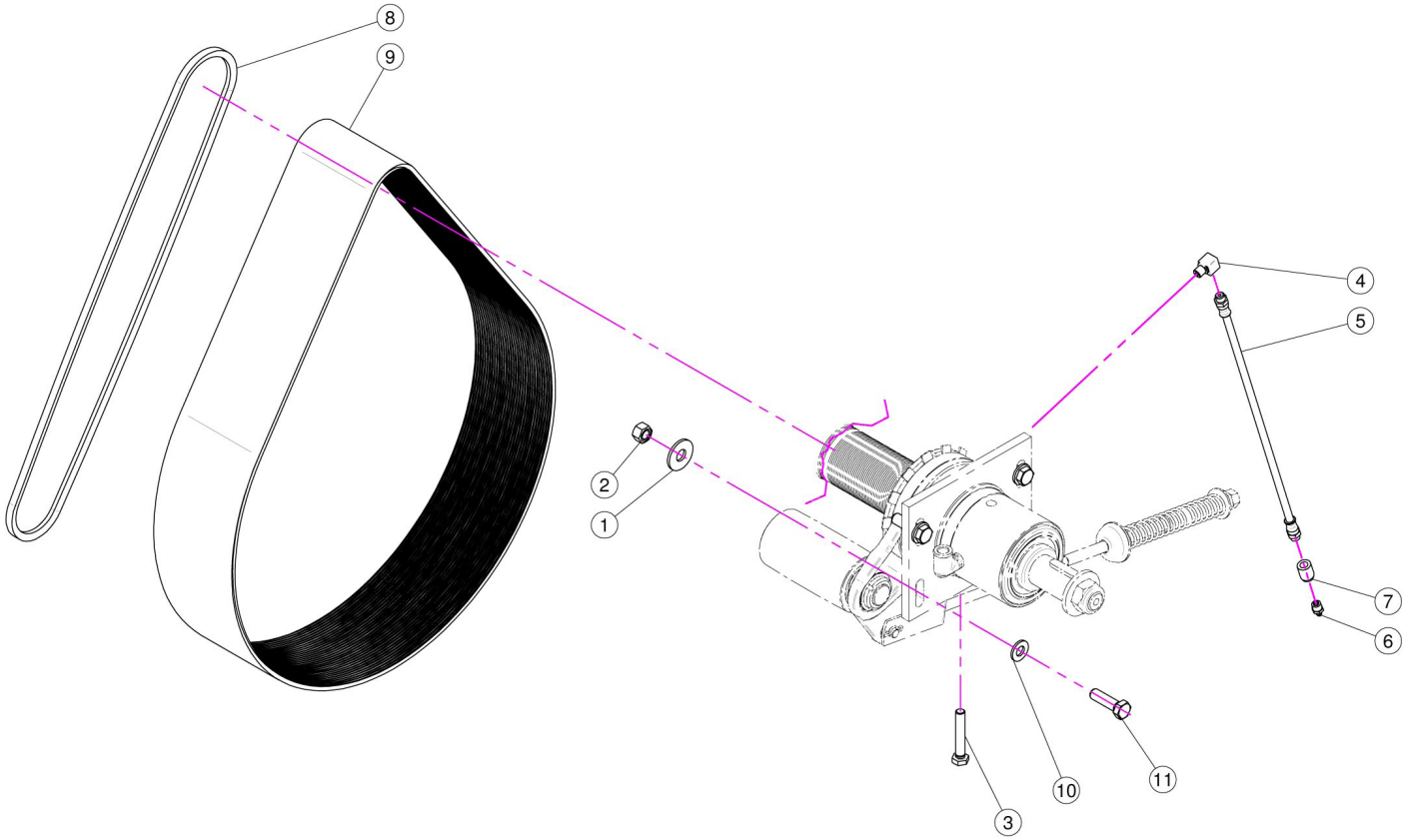

REF.	QTY.	PART NO.	DESCRIPTION
1	4	RP.012.036	Washer D12 x 36
2	4	D0.12.5587G	M12 Nut
3	1	TE.010.060T	Screw TE M10 x 60
4	1	02.736.000	90 G. M10 x 1 Fitting
5	1	02.738.040	Greaser Extension M10 x 1 L=400
6	1	ID.010.001	Grease Nipple
7	1	02.737.000	Accessori
8	2	C0.500.03V	V-Belt
9	1	C0.690.J50	Poly V-Belt
10	2	RP.012.000	Washer D.12
11	4	TE.012.040T	Bolt TE M12 x 40

2.21 AXLE & WHEEL HUBS

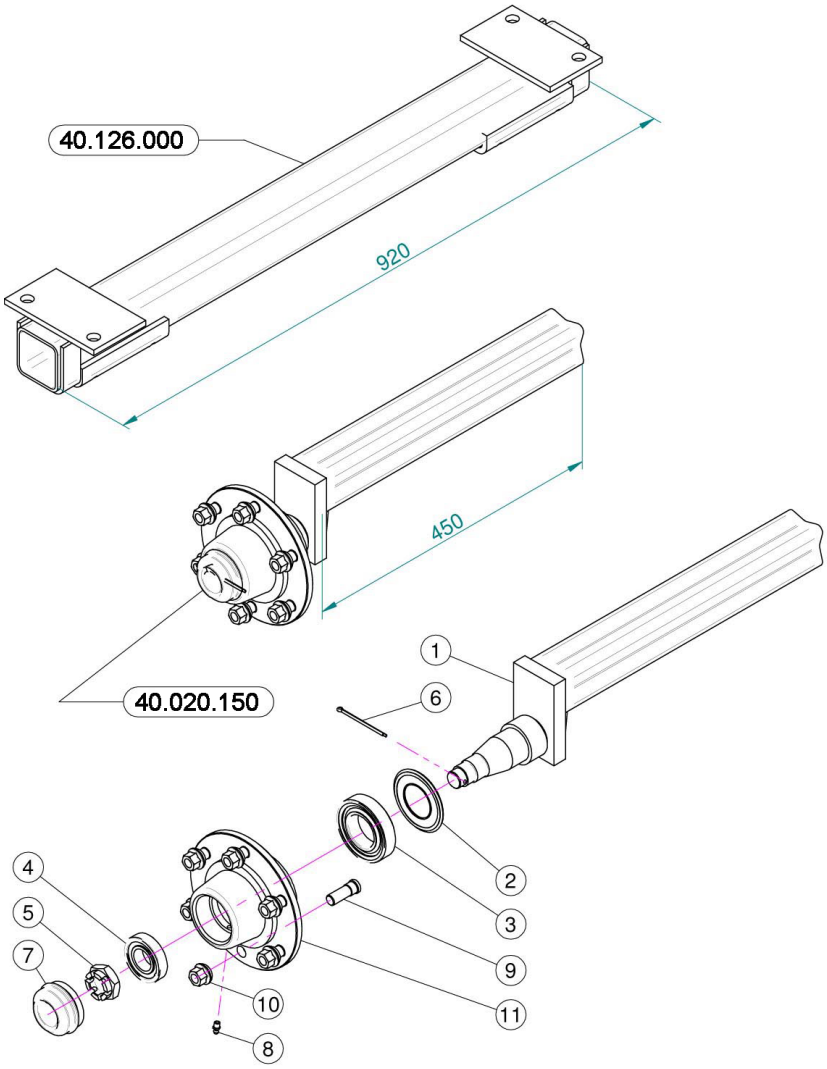

REF.	QTY.	PART NO.	DESCRIPTION
1	1	40.020.151	Axle Shaft
2	1	20.258.000	Oil Cover
3	1	30209	Bearing
4	1	K0.030.206	Bearing
5	1	DI.027.5594F	Six Castle Nut M27
6	1	20.259.000	Cotter Key
7	1	04.062.001	Cover
8	1	ID.006.001	Greaser
9	6	05.911.001	Stud
10	6	05.911.000	Special Nut
11	1	05.903.001	Six Holes Flange

2.22 DRIVESHAFT

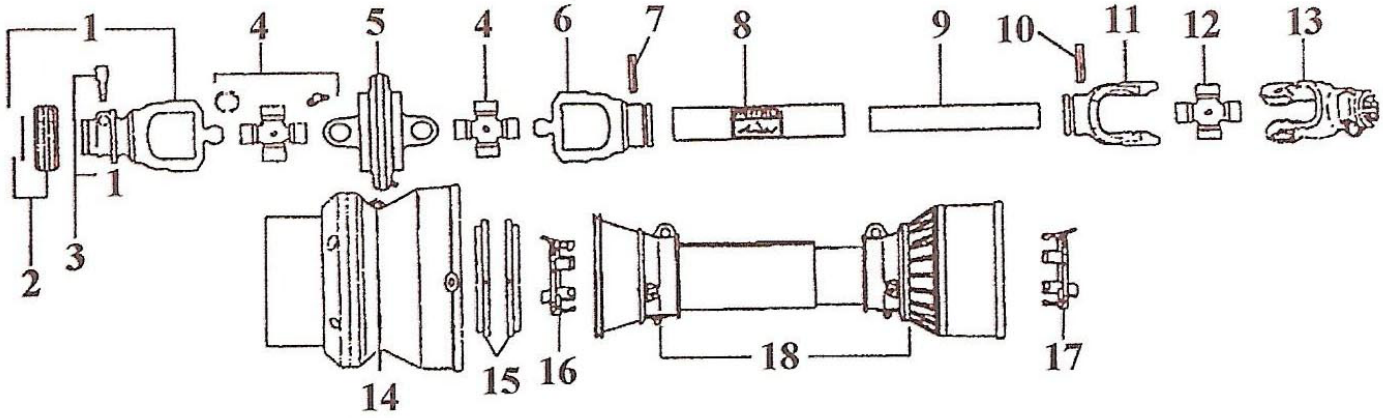

REF.	QTY.	PART NO.	DESCRIPTION
1	1	573060375	RS CV Yoke 1-3/8"
2	1	240080061	RS Collar
3	2	403000001	Complete Push Button
4	2	412060012	CV Cross Kit
5	1	511060051	CV Body
6	1	215066854	CV Outer Tube Yoke
7	1	341042000	Roll Pin
8	1	125171500	Outer Drive Tube
9	1	245161200	Inner Drive Tube
10	1	341043000	Roll Pin
11	1	204066852	Inner Tube Yoke
12	1	41206	Cross Kit
13	1	572060351	Yoke 1-3/8" x 6-Spline
14	1	517068001	CV Hard Shell
15	1	255060351	Shield Bearing
16	1	255060005	Bearing Outer Tube
17	1	255060006	Bearing Inner Tube
18	1	5F06121R1	Complete Shield w/o Hard Shell

3 LIMITED WARRANTY

GEARMORE INC.

GEARMORE, INC., warrants each new Gearmore product to be free from defects in material and workmanship for a period of twelve (12) months from date of purchase to the original purchaser. This warranty shall not apply to implements or parts that have been subject to misuse, negligence, accident, or that have been altered in any way.

Our obligation shall be limited to repairing or replacement of any part, provided that such part is returned within thirty (30) days from date of failure to Gearmore through the dealer from whom the purchase was made, transportation charges prepaid.

This warranty shall not be interpreted to render us liable for injury or damages of any kind or nature, direct, consequential or contingent, to person or property. This warranty does not extend to loss of crops, loss because of delay in harvesting or any other expenses, for any other reasons.

Gearmore in no way warranties engines, tires, or other trade accessories, since these items are warranted separately by these respective manufacturers.

Gearmore reserves the right to make improvements in design or changes in specification at any time, without incurring any obligations to owners or units previously sold.

Please be advised that all warranty work done by your dealer must be approved by Gearmore before work begins.

GEARMORE, INC.
13477 Benson Ave.
Chino, CA 91710

Always refer to and heed machine operating warning decals on machine.

To validate the warranty on this product, please log-in to our website - www.gearmore.com. You will find "warranty registration" listed at the top of our homepage.